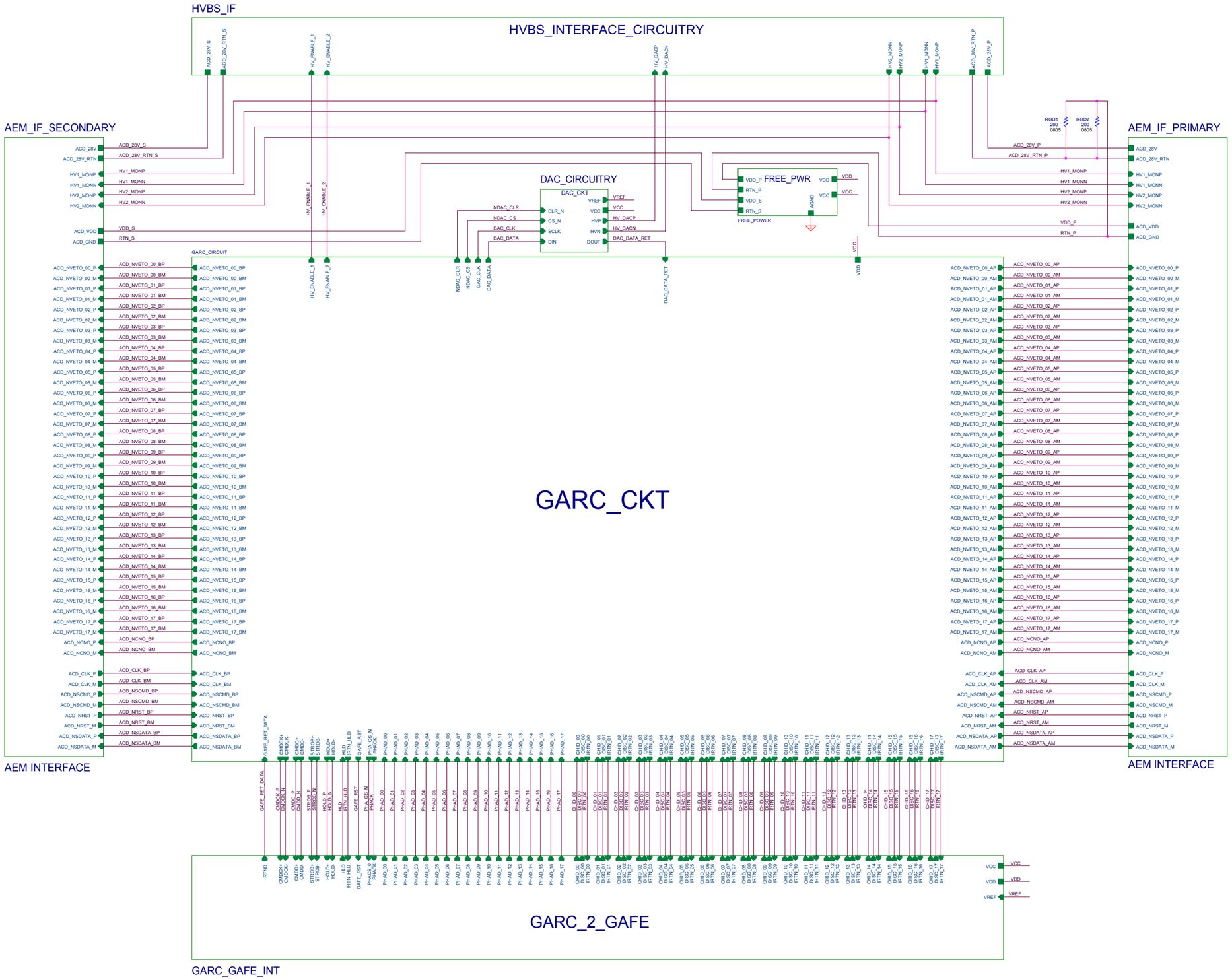

Schematic Pages for ACD FREE (TOTAL = 29)

Page 1: FREE_TOP_SCHEMATIC
Page 2: HVBS_INTERFACE_CIRCUITRY
Page 3: DAC_CIRCUITRY
Page 4: AEM_IF_PRIMARY
Page 5: AEM_IF_SECONDARY
Page 6: FREE_PWR
Page 7: GARC_CKT
Page 8: GARC_2_GAFE
Page 9: FREE_ID_CKT
Page 10: RST_CKT
Page 11: ADDRESS_BUSSES
Page 12_00: GAFE_CHANNEL_00
Page 12_01 GAFE_CHANNEL_01
Page 12_02: GAFE_CHANNEL_02
Page 12_03: GAFE_CHANNEL_03
Page 12_04: GAFE_CHANNEL_04
Page 12_05: GAFE_CHANNEL_05
Page 12_06: GAFE_CHANNEL_06
Page 12_07: GAFE_CHANNEL_07
Page 12_08: GAFE_CHANNEL_08
Page 12_09: GAFE_CHANNEL_09
Page 12_10: GAFE_CHANNEL_10
Page 12_11: GAFE_CHANNEL_11
Page 12_12: GAFE_CHANNEL_12
Page 12_13: GAFE_CHANNEL_13
Page 12_14: GAFE_CHANNEL_14
Page 12_15: GAFE_CHANNEL_15
Page 12_16: GAFE_CHANNEL_16
Page 12_17: GAFE_CHANNEL_17

GLAST The Gamma Ray Large Area Space Telescope

Designer: D. Sheppard
Approved: G. Unger

NASA Goddard Space Flight Center
Laboratory for High Energy Astrophysics
Greenbelt, Maryland 20771

Dave Sheppard / x6539

GAMMA-RAY LARGE AREA SPACE TELESCOPE (GLAST)
ANTI-COINCIDENCE DETECTOR (ACD)
FRONT-END EVENT ELECTRONICS (FREE)

FRONT END EVENT ELECTRONICS (FREE) PCB

GLAST LAT ACD FLIGHT HARDWARE

Monday, December 01, 2003

Size	CAGE Code	DWG NO	Rev
D	<Cage Code>	2061840-01	B

Scale

Sheet 1 of 29

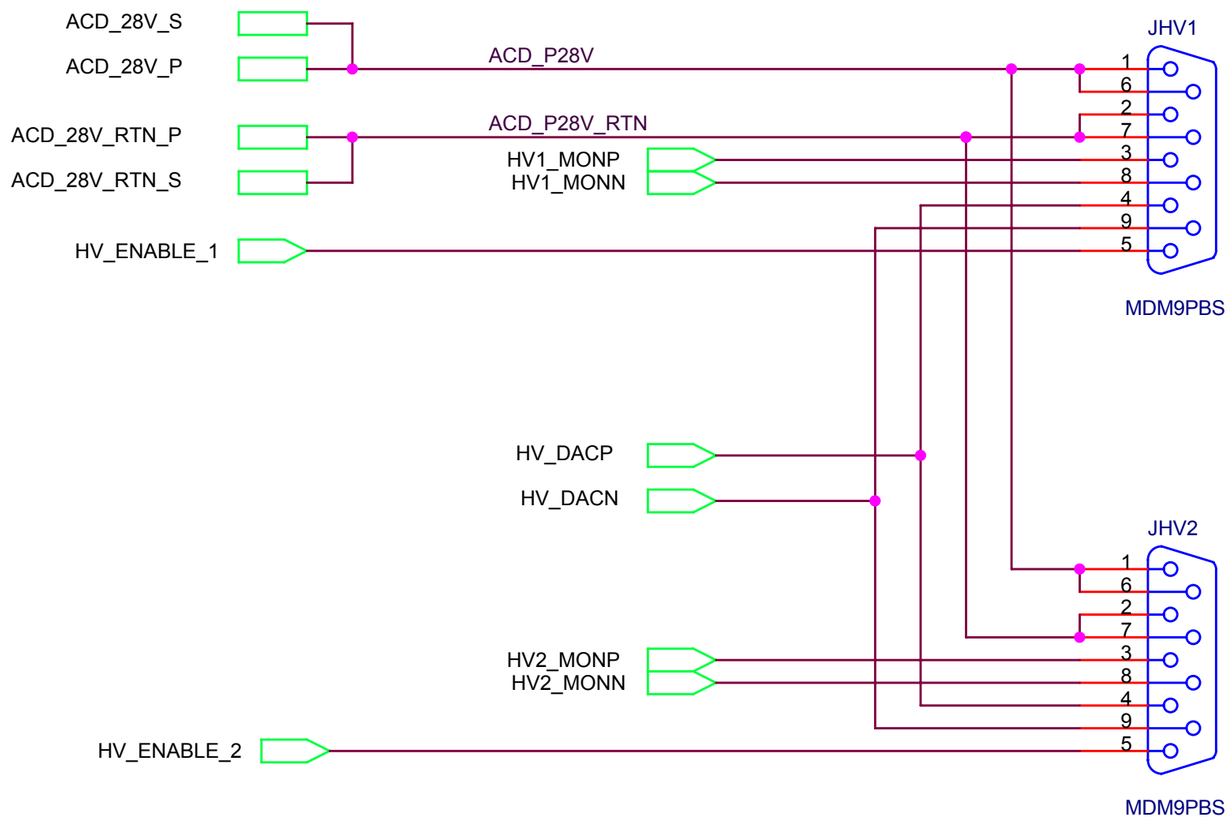

Dave Sheppard, x66539

Title
HVBS INTERFACE CIRCUITRY

Size	Document Number	Rev
A	2061840-02	B

Date: Thursday, October 23, 2003 Sheet 2 of 29

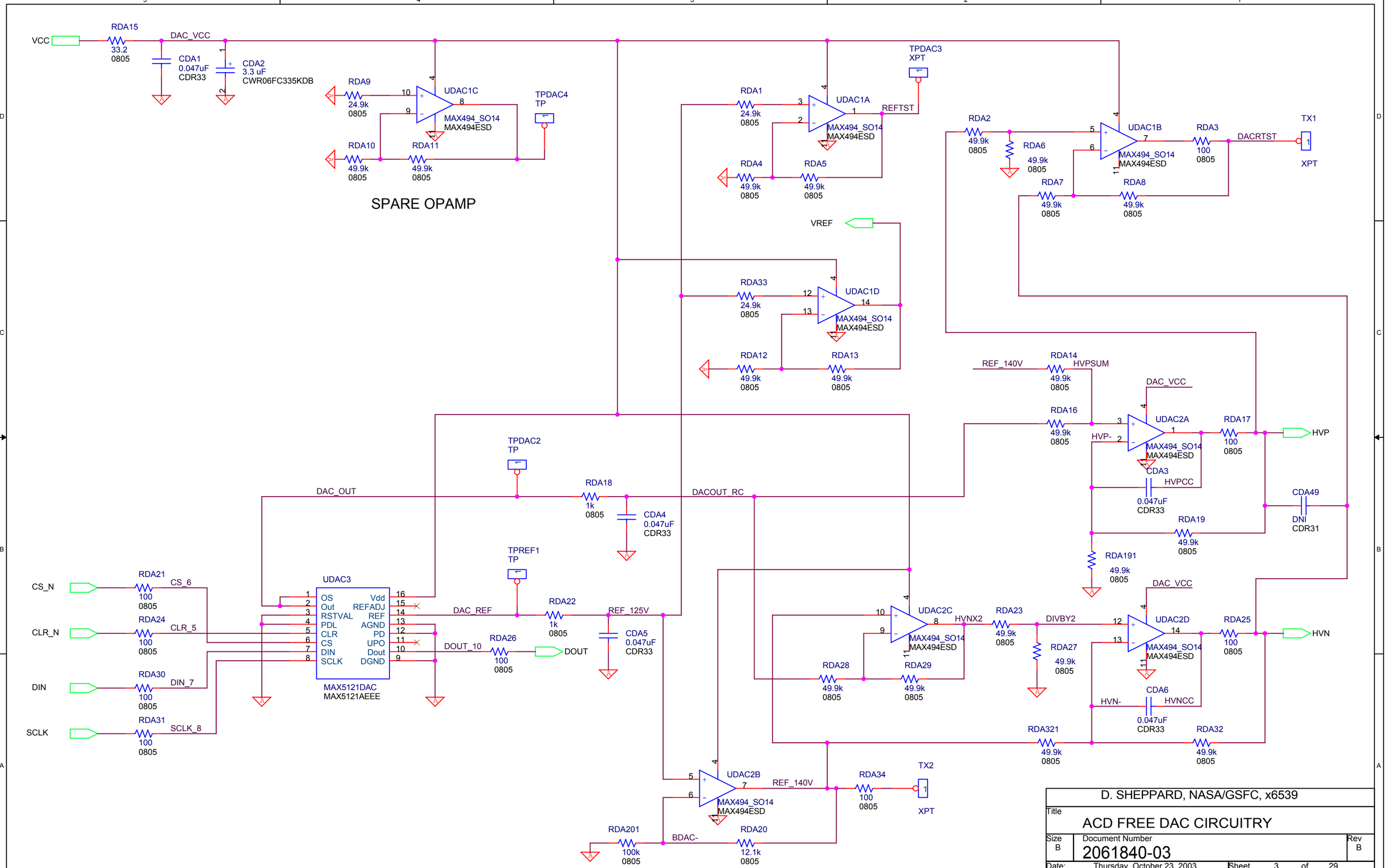

D. SHEPPARD, NASA/GSFC, x6539

Title: ACD FREE DAC CIRCUITRY

Size: B | Document Number: 2061840-03 | Rev: B

Date: Thursday, October 23, 2003 | Sheet 3 of 29

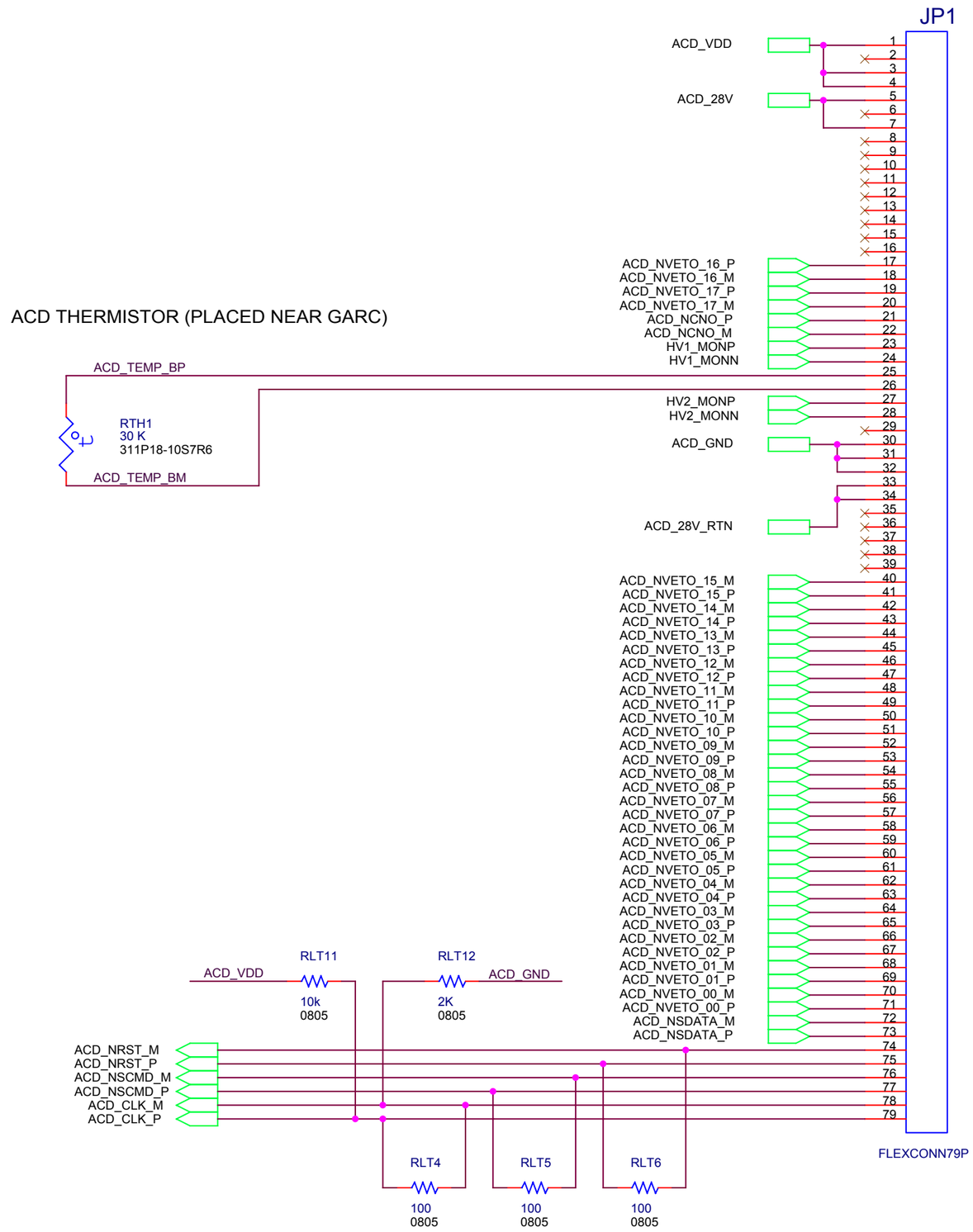

Dave Sheppard, x66539

Title	ACD AEM INTERFACE CONNECTOR	
Size B	Document Number 2061840-04 and -05	Rev B
Date: Thursday, October 23, 2003	Sheet 4 of 29	

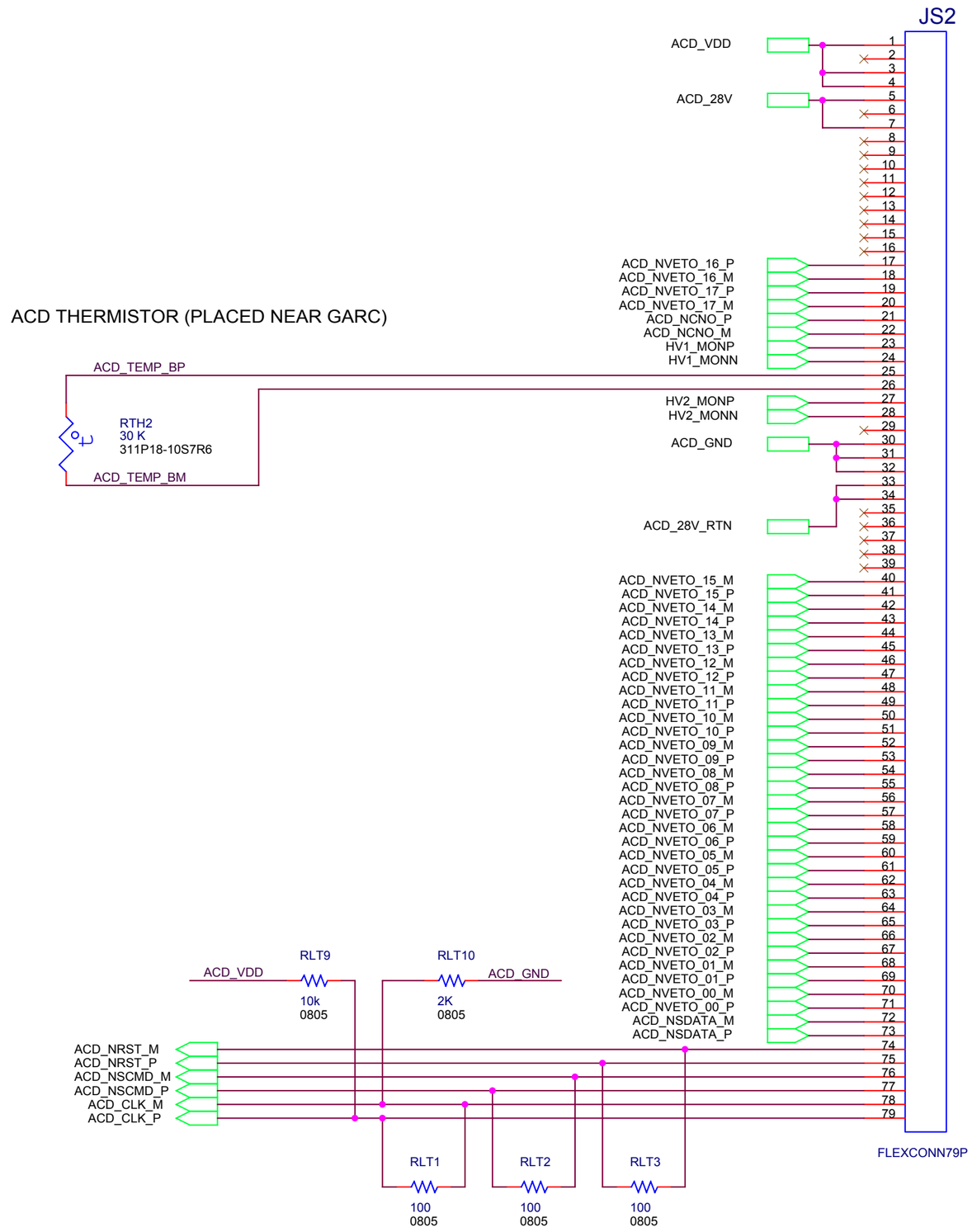

Dave Sheppard, x66539

Title	ACD AEM INTERFACE CONNECTOR	
Size B	Document Number 2061840-04 and -05	Rev B
Date: Wednesday, October 29, 2003	Sheet 5 of 29	

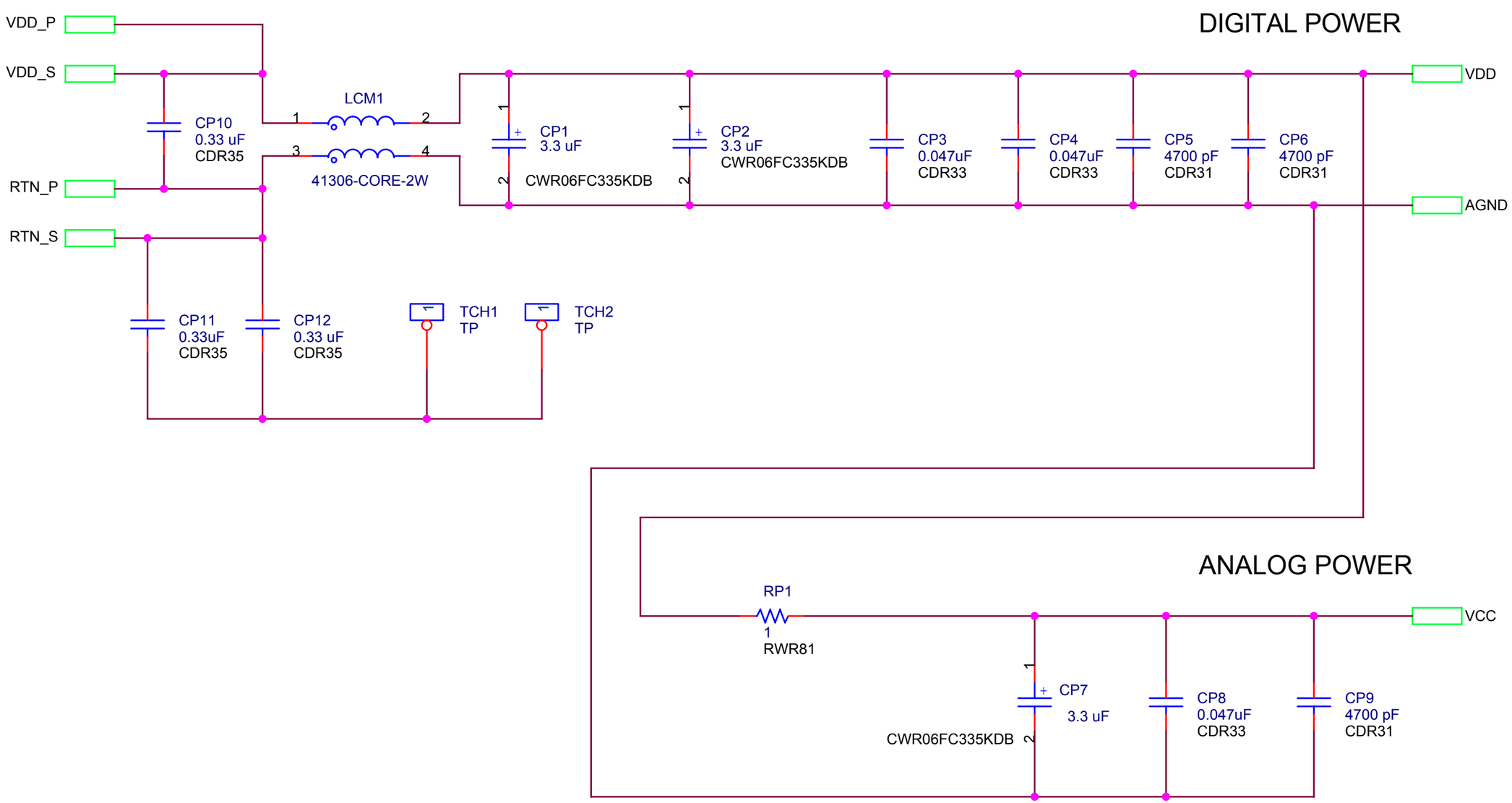

D. SHEPPARD, NASA/GSFC, x6539

Title

FREE POWER FILTERING CIRCUITRY

Size	Document Number	Rev
A	2061840-06	B

Date: Thursday, October 23, 2003 Sheet 6 of 29

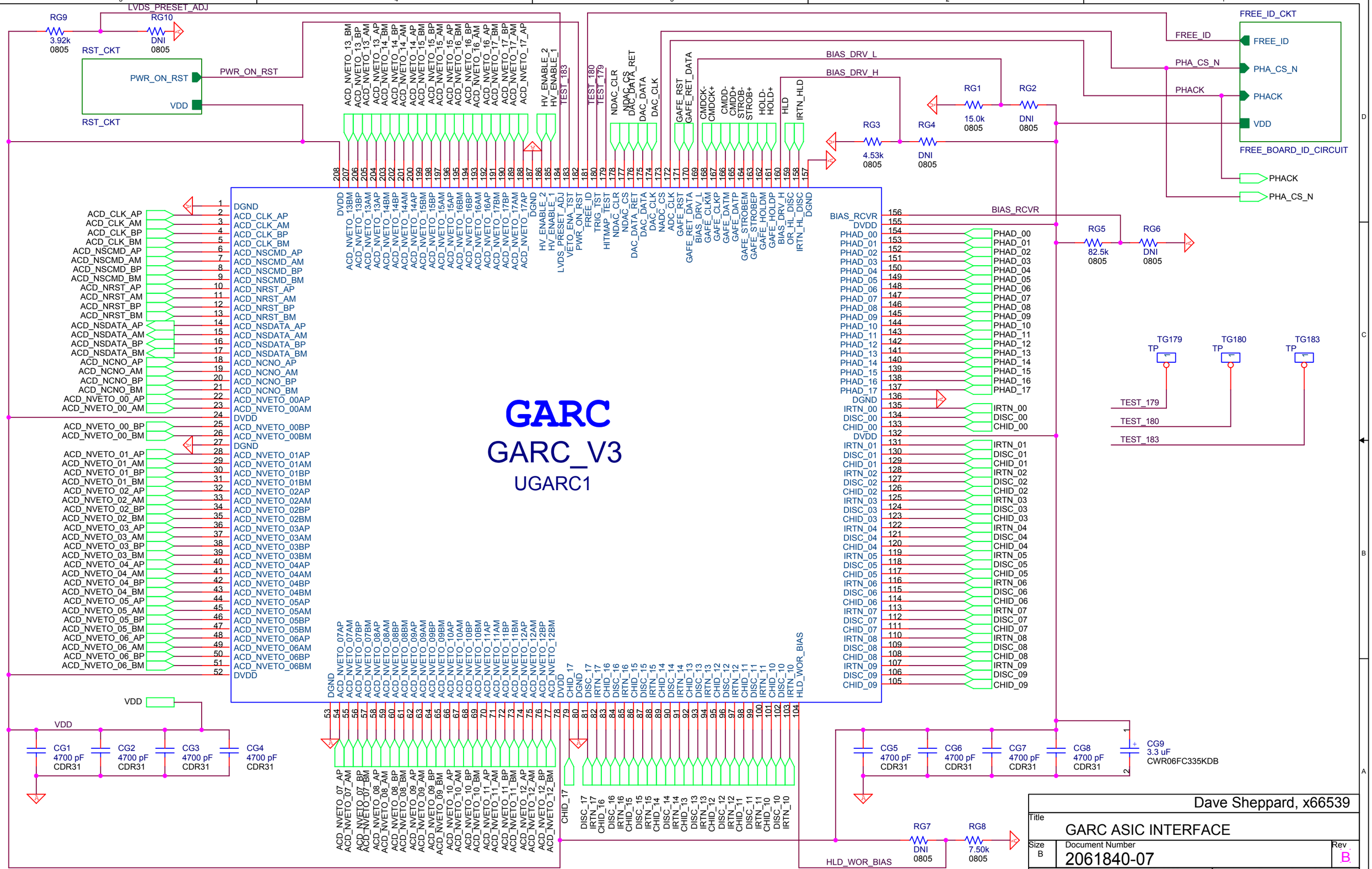

Dave Sheppard, x66539

Title: GARC ASIC INTERFACE

Size: B | Document Number: 2061840-07 | Rev: B

Date: Thursday, October 23, 2003 | Sheet 7 of 29

18 GAFE Channels

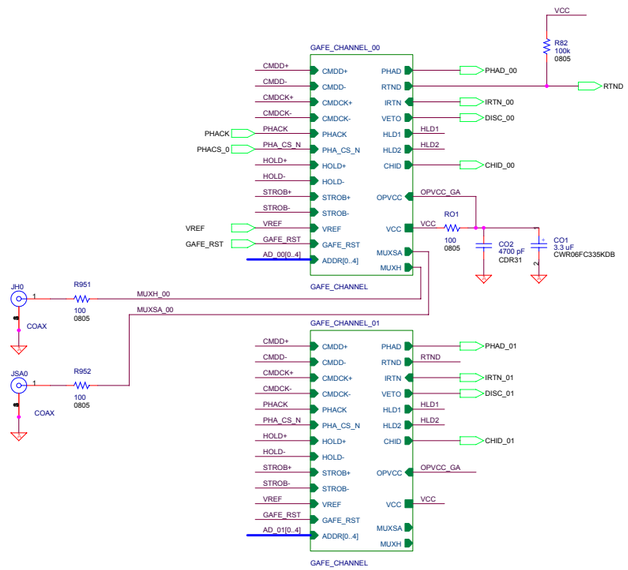

CHANNEL GROUP
00 & 01

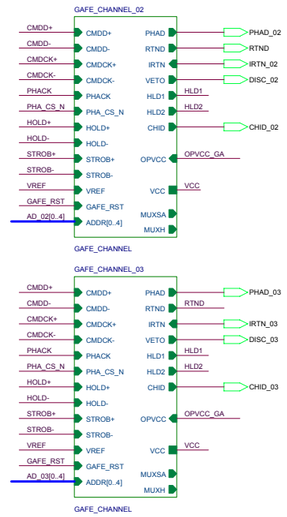

CHANNEL GROUP
02 & 03

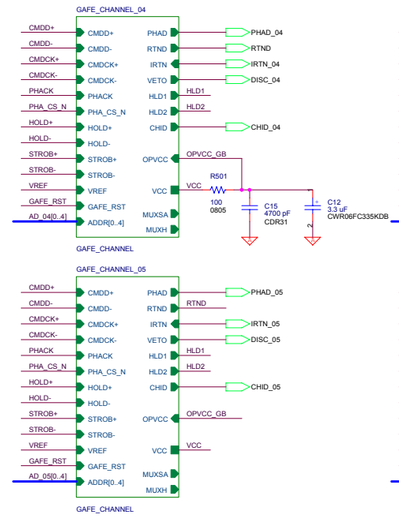

CHANNEL GROUP
04 & 05

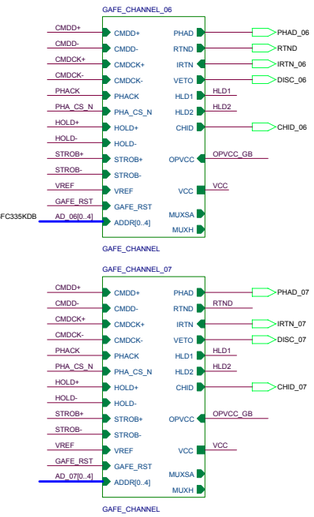

CHANNEL GROUP
06 & 07

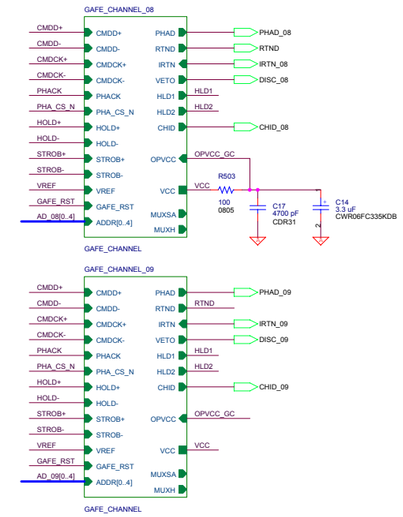

CHANNEL GROUP
08 & 09

TERMINATIONS FOR COMMON DIFFERENTIAL GAFE SIGNALS

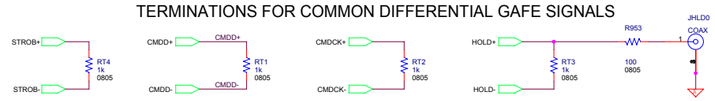

PULLUP/PULLDN RESISTORS FOR GAFE ADDRESSING

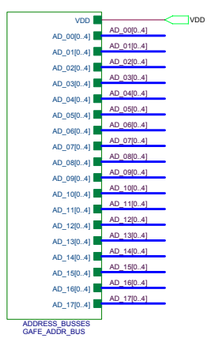

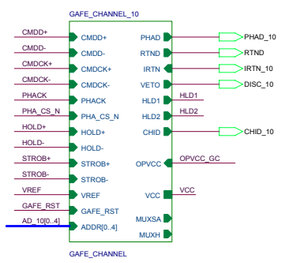

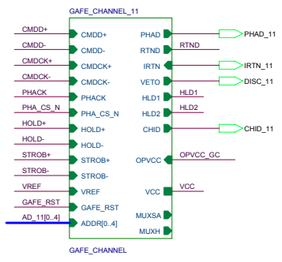

CHANNEL GROUP
10 & 11

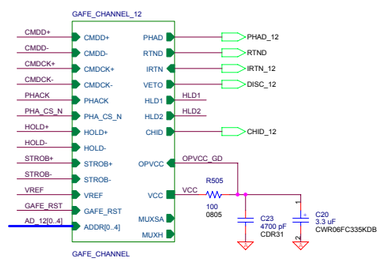

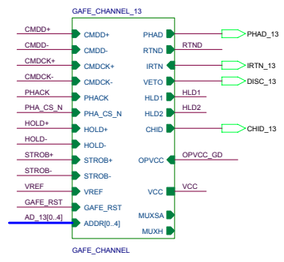

CHANNEL GROUP
12 & 13

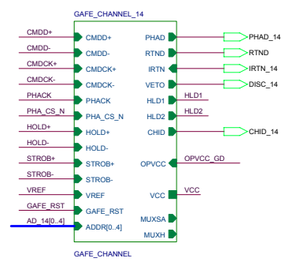

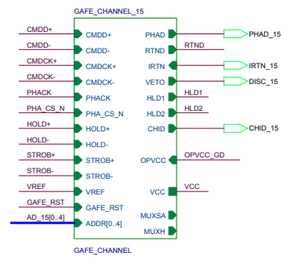

CHANNEL GROUP
14 & 15

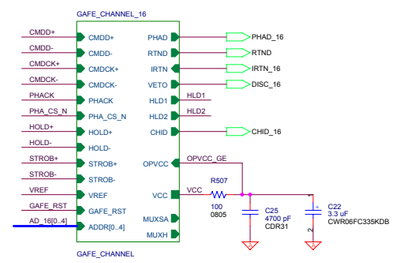

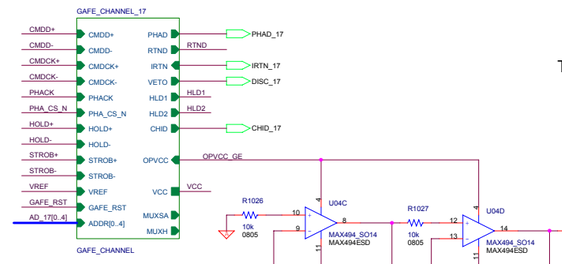

CHANNEL GROUP
16 & 17

HLD-RELATED TERMINATIONS

TEST POINTS, POWER AND GROUND

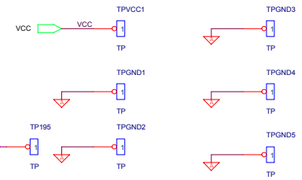

	Dave Sheppard, x66539	
Title	"GARC 2 GAFE SCHEMATIC"	
Size D	Document Number 2061840-08	Rev B
Date: Thursday, October 23, 2003	Sheet 8 of 29	

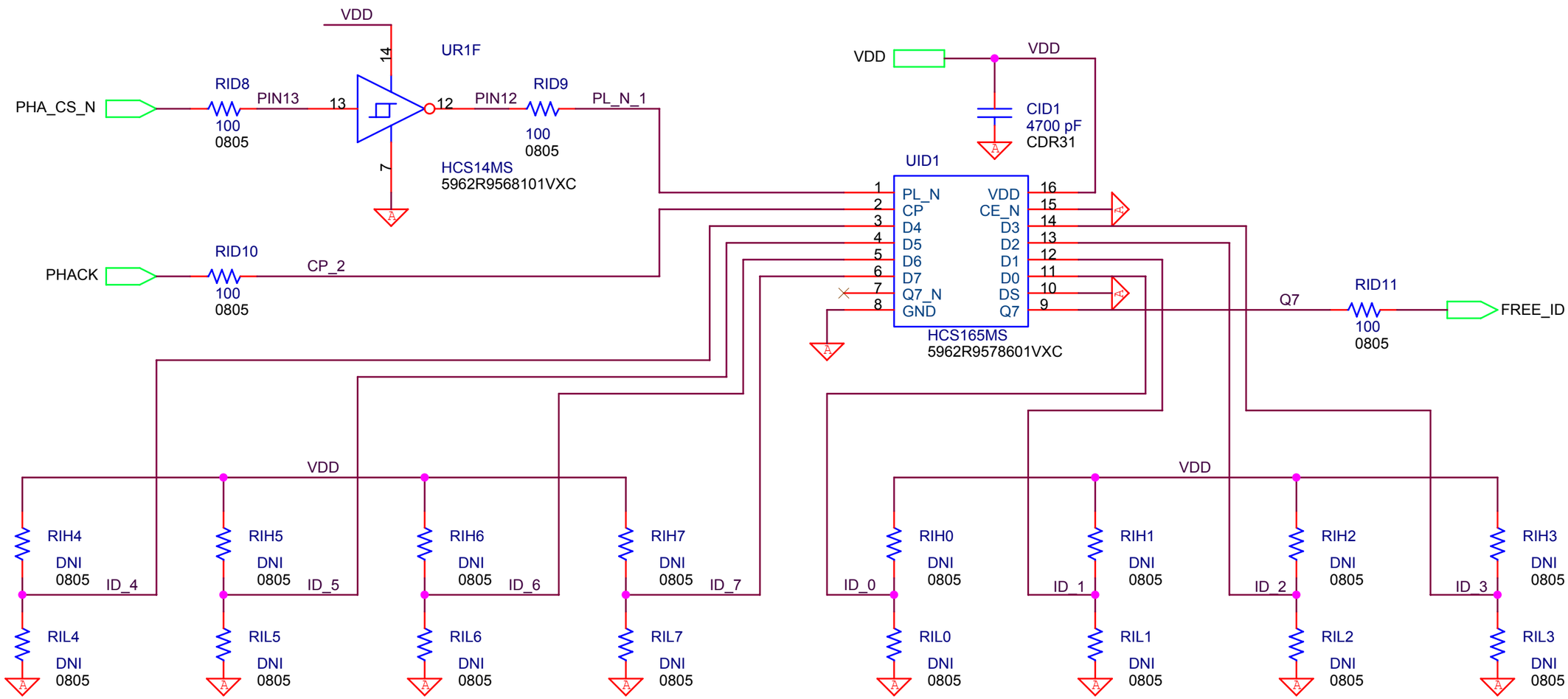

FREE BOARD ID CODE

BIT 7 - L/R INDICATOR (RIGHT = 0, LEFT = 1)

BITS [6:5] - PCB STATUS INDICATOR (00 = BREADBOARD, 01 = EM, 10 = FLIGHT, 11 = RESERVED)

BITS [4:0] - PCB SERIAL NUMBER (AS PER WOA)

		D. Sheppard, x66539
Title	FREE BOARD IDENTIFICATION CIRCUIT	
Size A	Document Number 2061840-09	Rev B
Date: Thursday, October 23, 2003	Sheet 9 of 29	

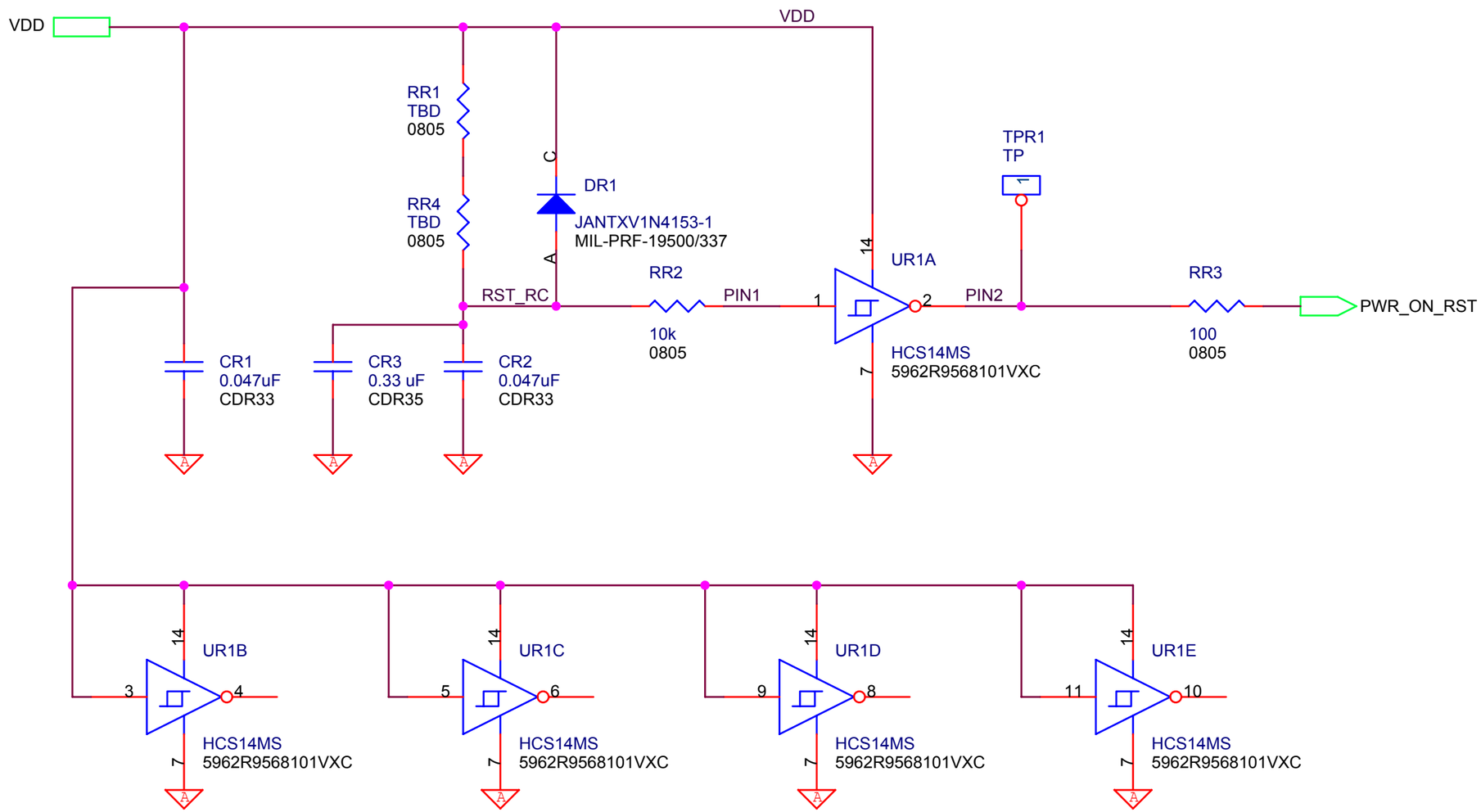

Dave Sheppard, x66539

Title
ACD FREE Reset Circuit

Size	Document Number	Rev
A	2061840-10	B

Date: Friday, November 21, 2003 Sheet 10 of 29

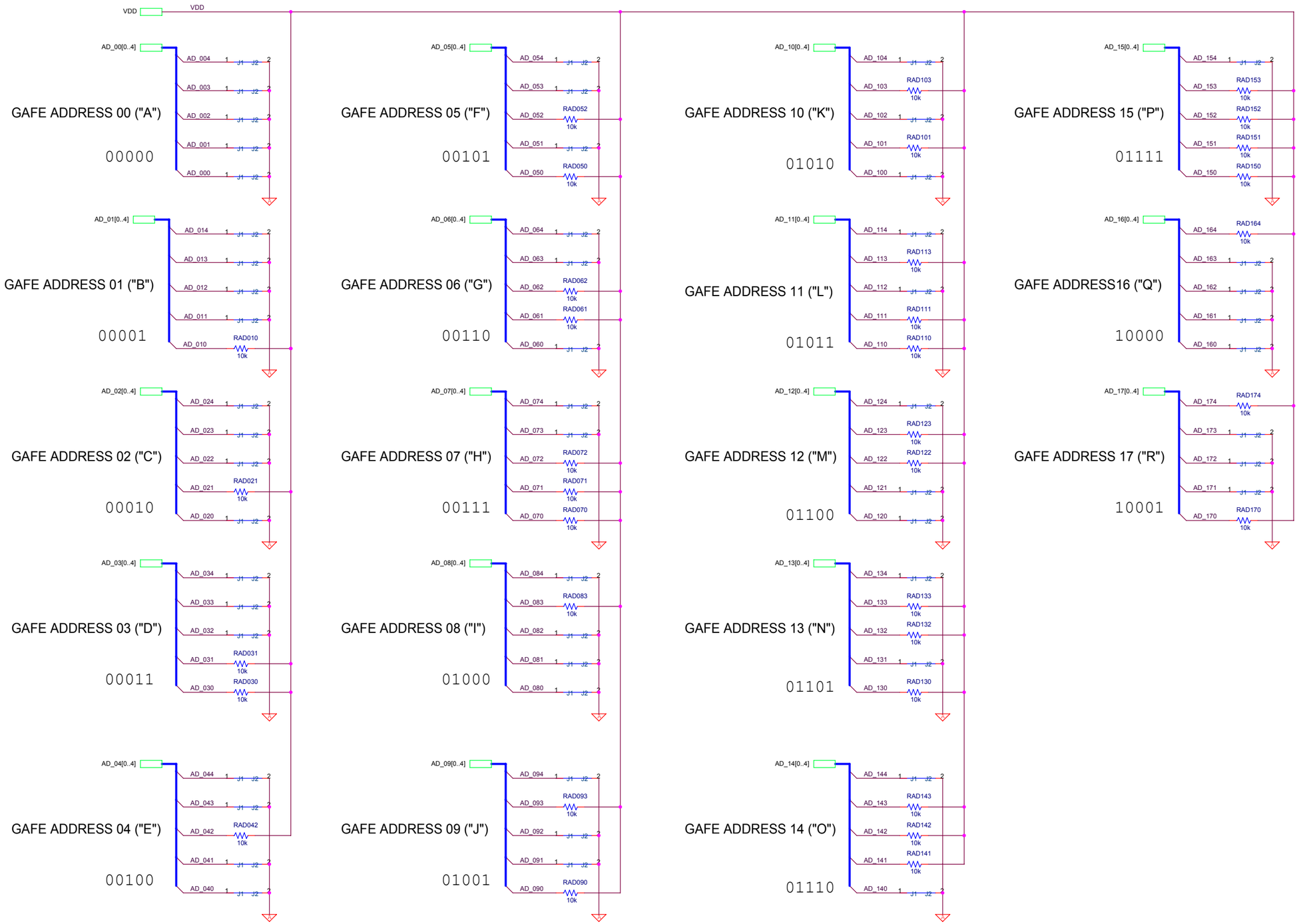

Dave Sheppard, X66539

Title	FREE CARD ADDRESS BUSSES	
Size C	Document Number 2061840-11	Rev B
Date: Thursday, October 23, 2003	Sheet 11 of 29	

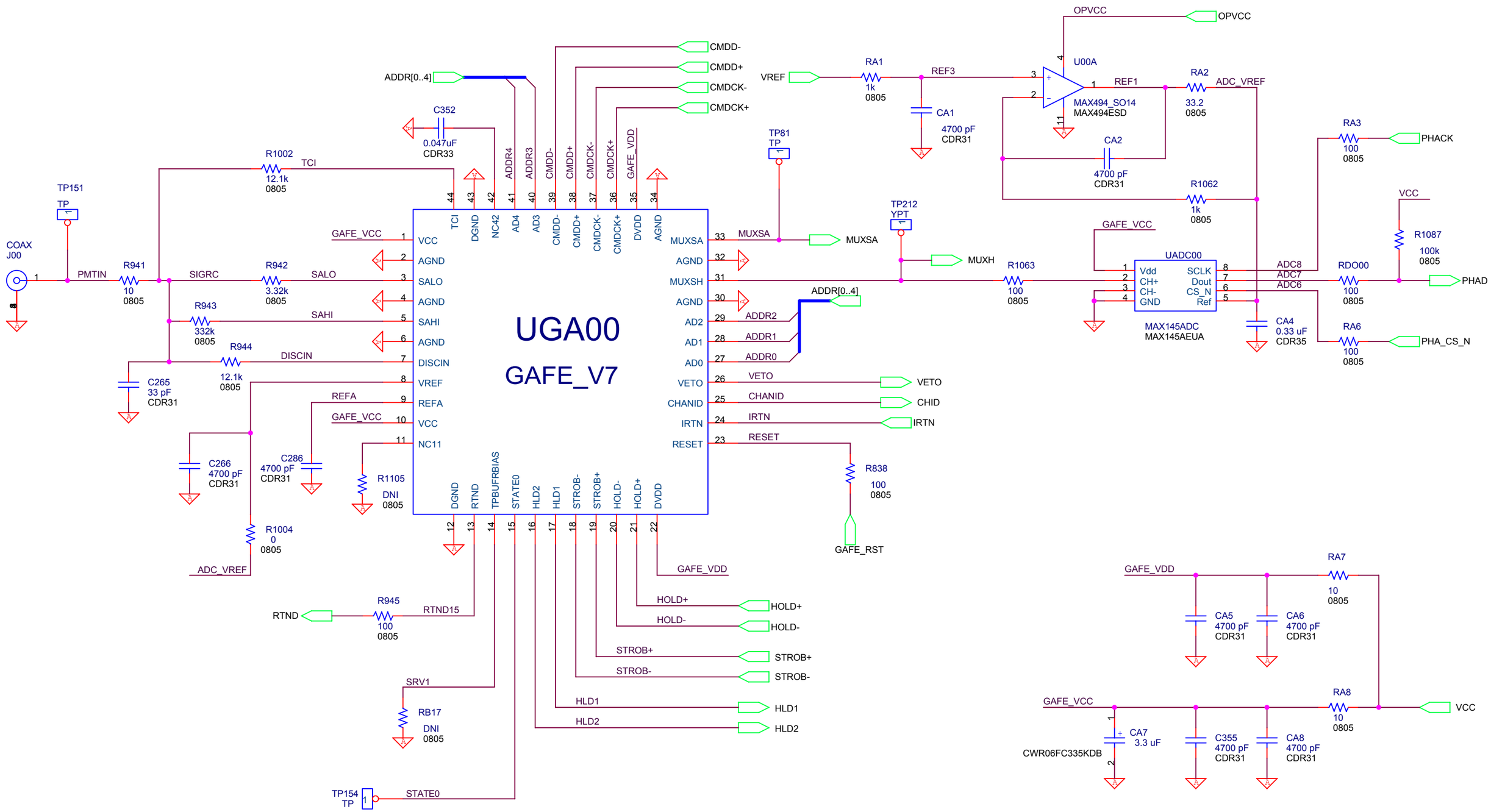

Dave Sheppard, x66539

Title: GLAST ACD GAFE ASIC AND ADC CIRCUIT

Size: B | Document Number: 2061840-12 to -29 | Rev: B

Date: Thursday, October 23, 2003 | Sheet 13 of 29

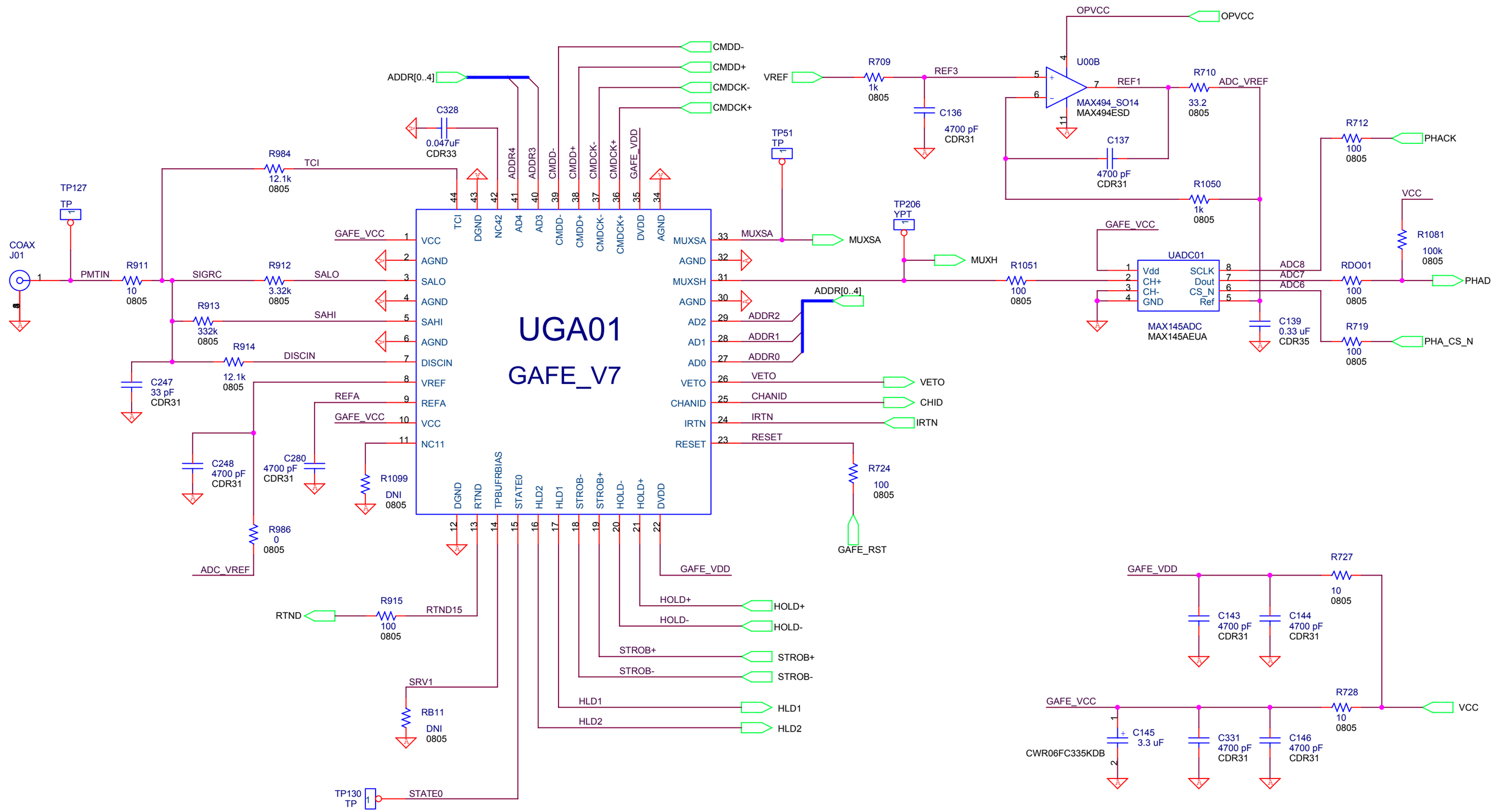

Dave Sheppard, x66539

Title: GLAST ACD GAFE ASIC AND ADC CIRCUIT

Size: B | Document Number: 2061840-12 to -29 | Rev: B

Date: Wednesday, October 29, 2003 | Sheet 14 of 29

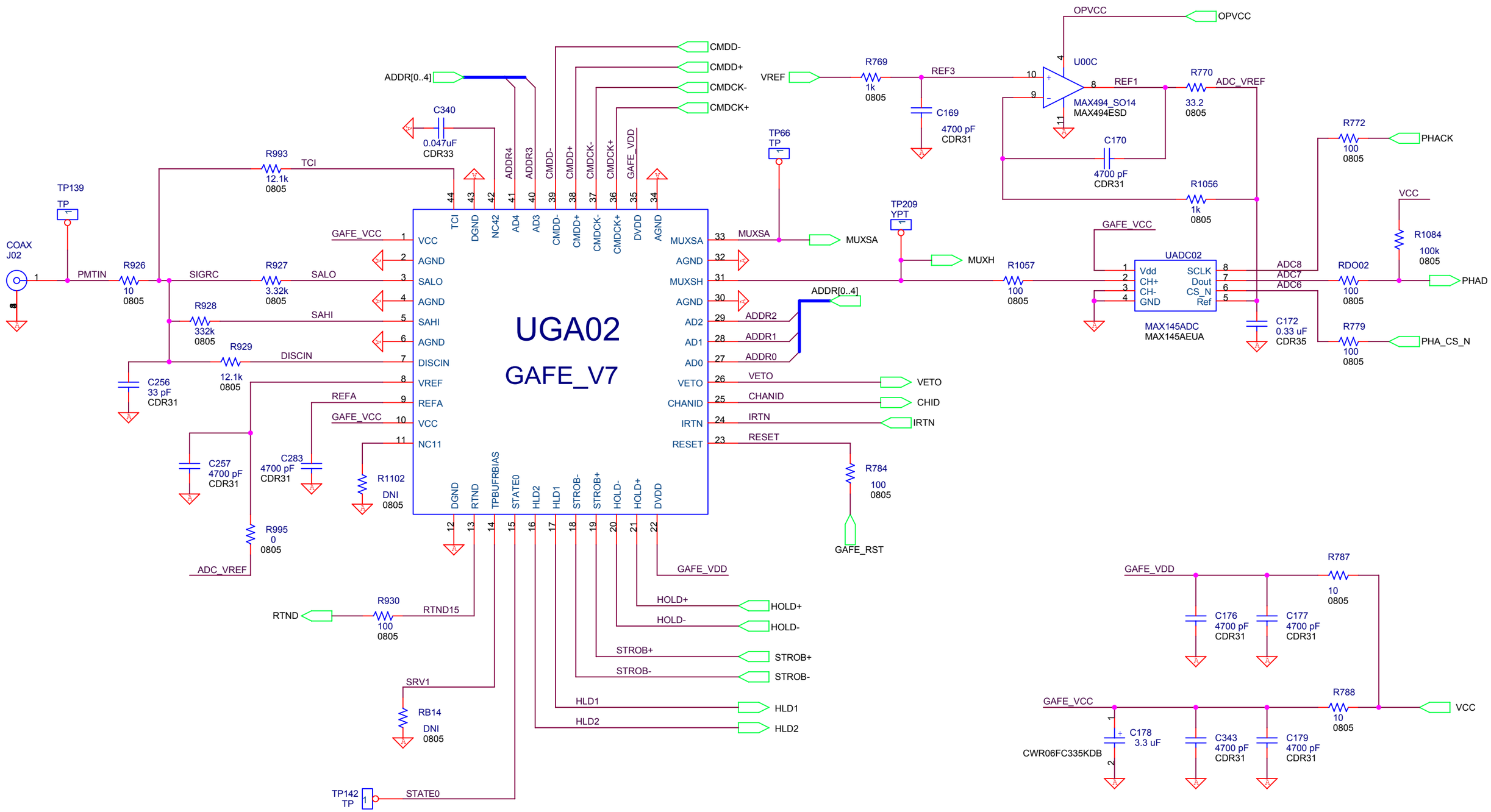

Dave Sheppard, x66539

Title: GLAST ACD GAFE ASIC AND ADC CIRCUIT

Size	Document Number	Rev
B	2061840-12 to -29	B

Date: Wednesday, October 29, 2003 Sheet 15 of 29

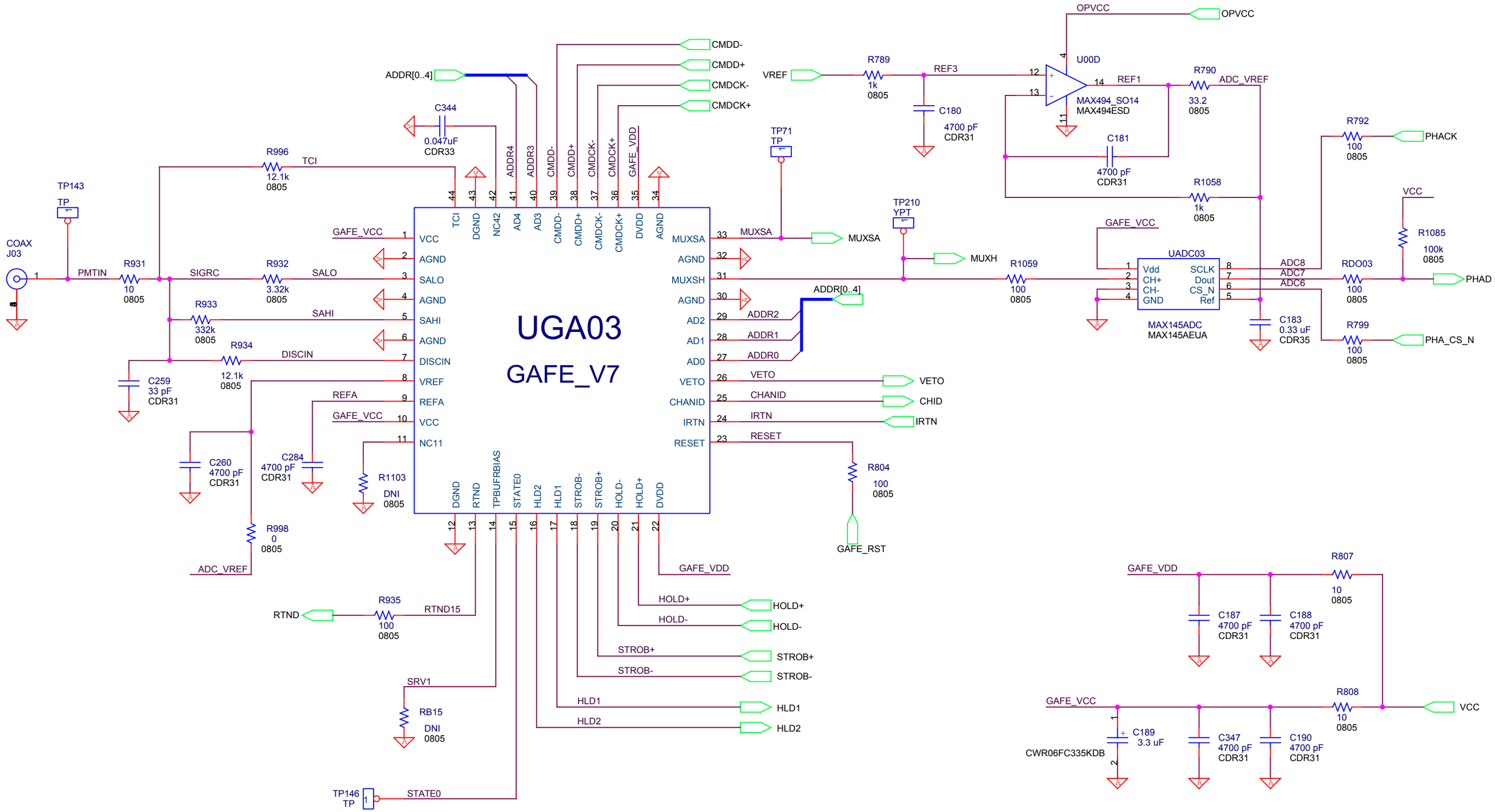

Dave Sheppard, x66539

Title: GLAST ACD GAFE ASIC AND ADC CIRCUIT

Size: B | Document Number: 2061840-12 to -29 | Rev: B

Date: Wednesday, October 29, 2003 | Sheet 16 of 29

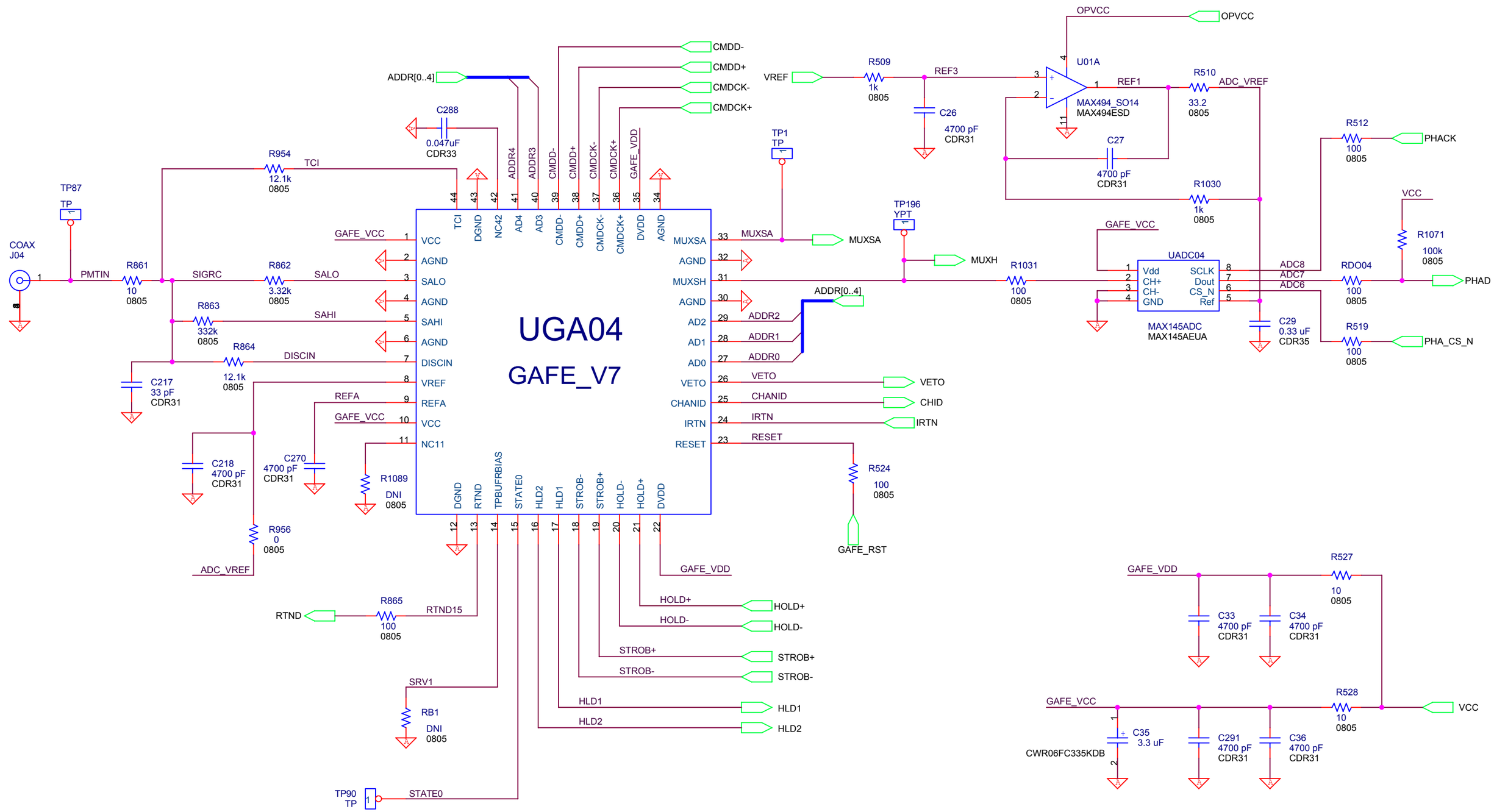

Dave Sheppard, x66539

Title: GLAST ACD GAFE ASIC AND ADC CIRCUIT

Size: B | Document Number: 2061840-12 to -29 | Rev: B

Date: Wednesday, October 29, 2003 | Sheet 17 of 29

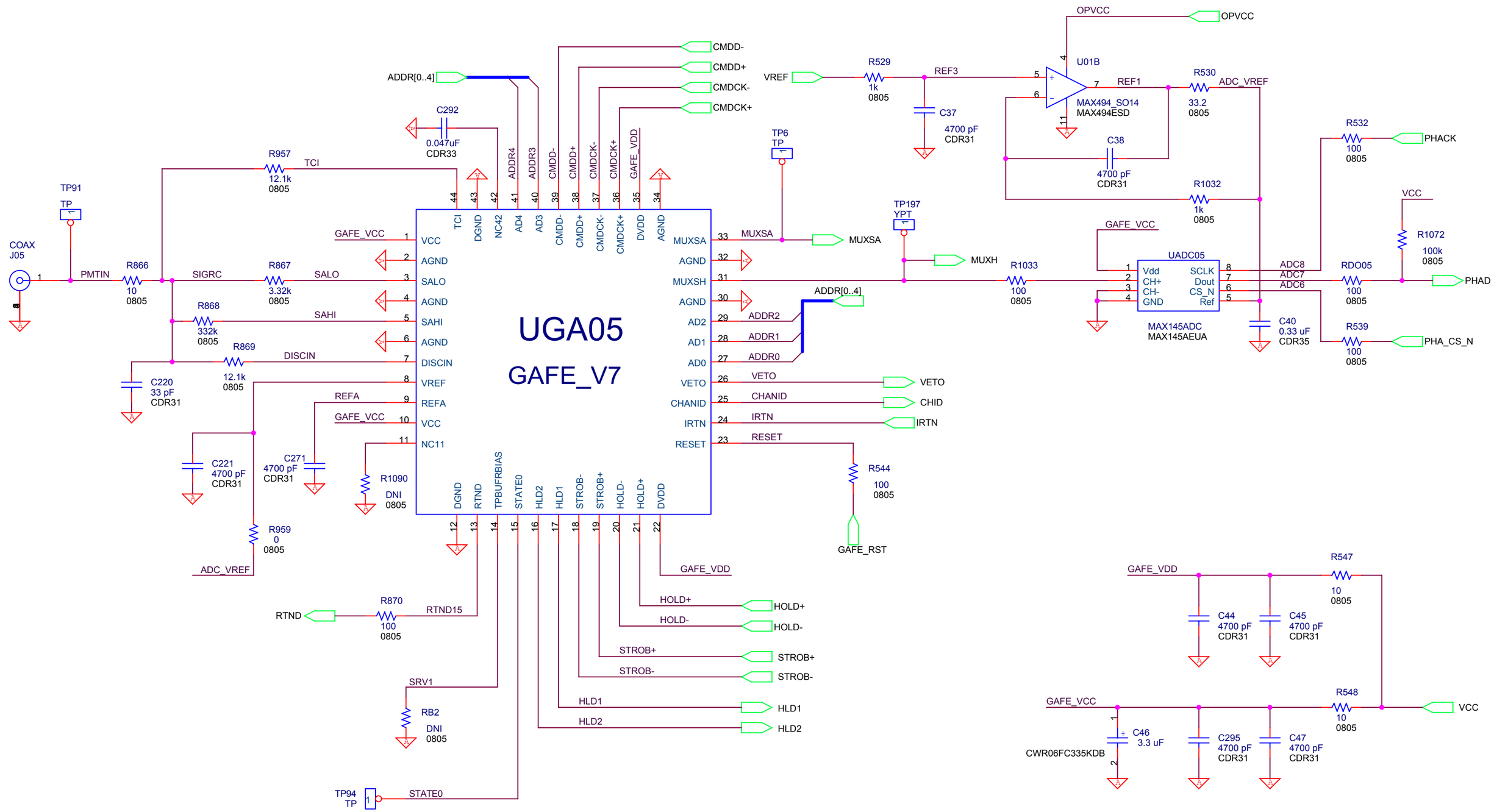

Dave Sheppard, x66539

Title: GLAST ACD GAFE ASIC AND ADC CIRCUIT

Size: B | Document Number: 2061840-12 to -29 | Rev: B

Date: Wednesday, October 29, 2003 | Sheet 18 of 29

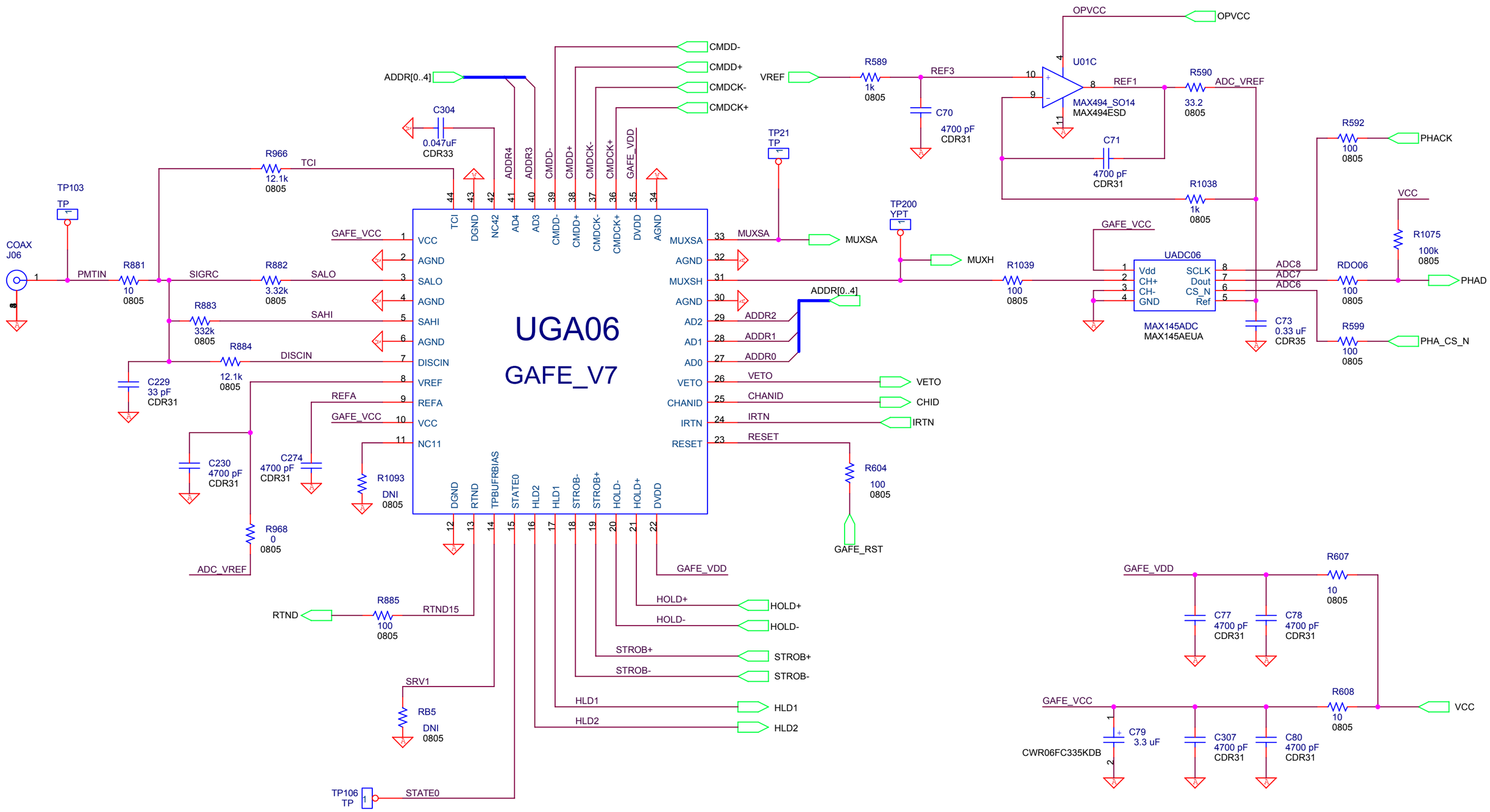

Dave Sheppard, x66539

Title: GLAST ACD GAFE ASIC AND ADC CIRCUIT

Size: B | Document Number: 2061840-12 to -29 | Rev: B

Date: Wednesday, October 29, 2003 | Sheet 19 of 29

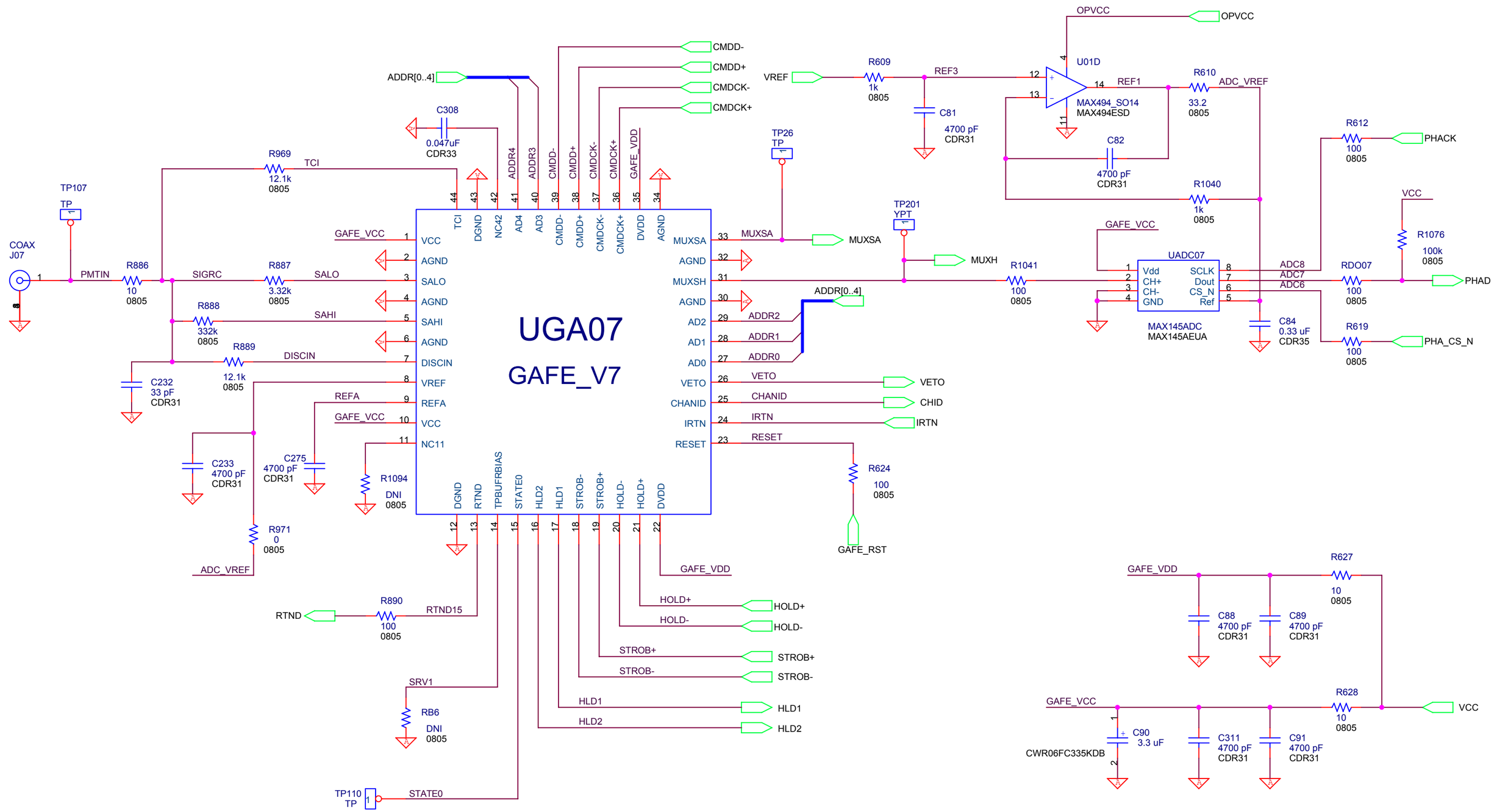

Dave Sheppard, x66539

Title: GLAST ACD GAFE ASIC AND ADC CIRCUIT

Size: B | Document Number: 2061840-12 to -29 | Rev: B

Date: Wednesday, October 29, 2003 | Sheet 20 of 29

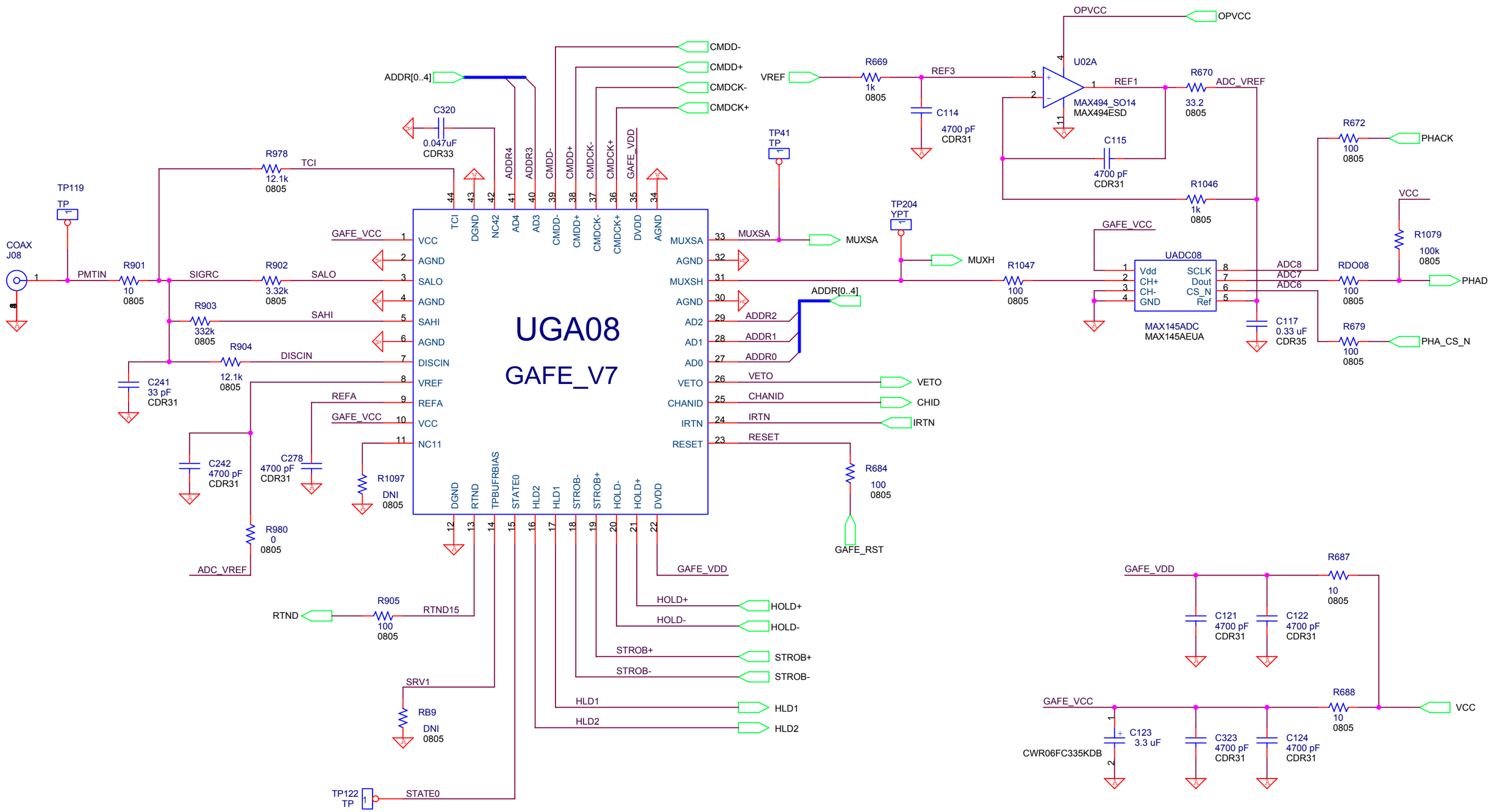

Dave Sheppard, x66539

Title: GLAST ACD GAFE ASIC AND ADC CIRCUIT

Size: B | Document Number: 2061840-12 to -29 | Rev: B

Date: Wednesday, October 29, 2003 | Sheet 21 of 29

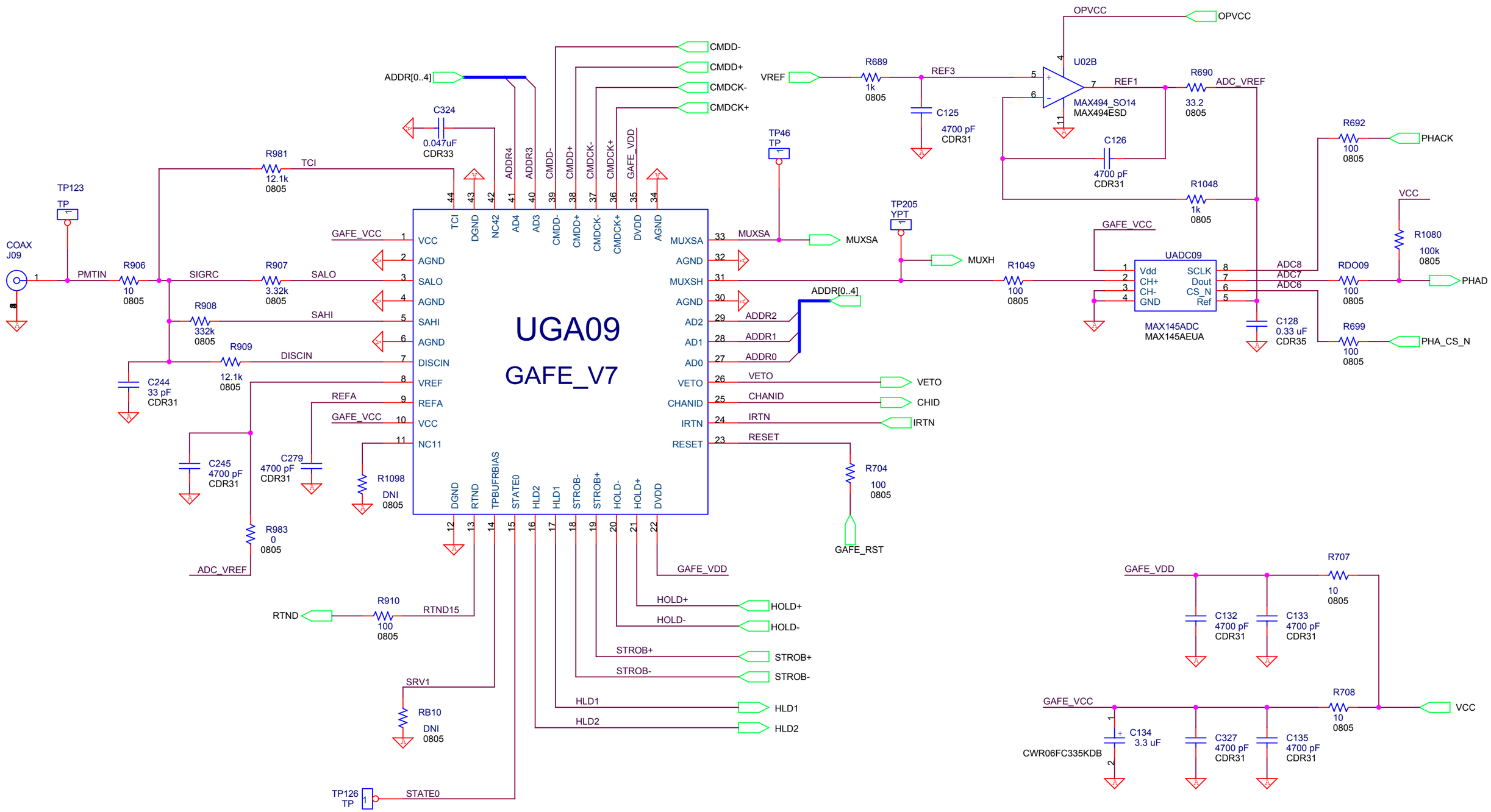

Dave Sheppard, x66539

Title: GLAST ACD GAFE ASIC AND ADC CIRCUIT

Size: B | Document Number: 2061840-12 to -29 | Rev: B

Date: Wednesday, October 29, 2003 | Sheet 22 of 29

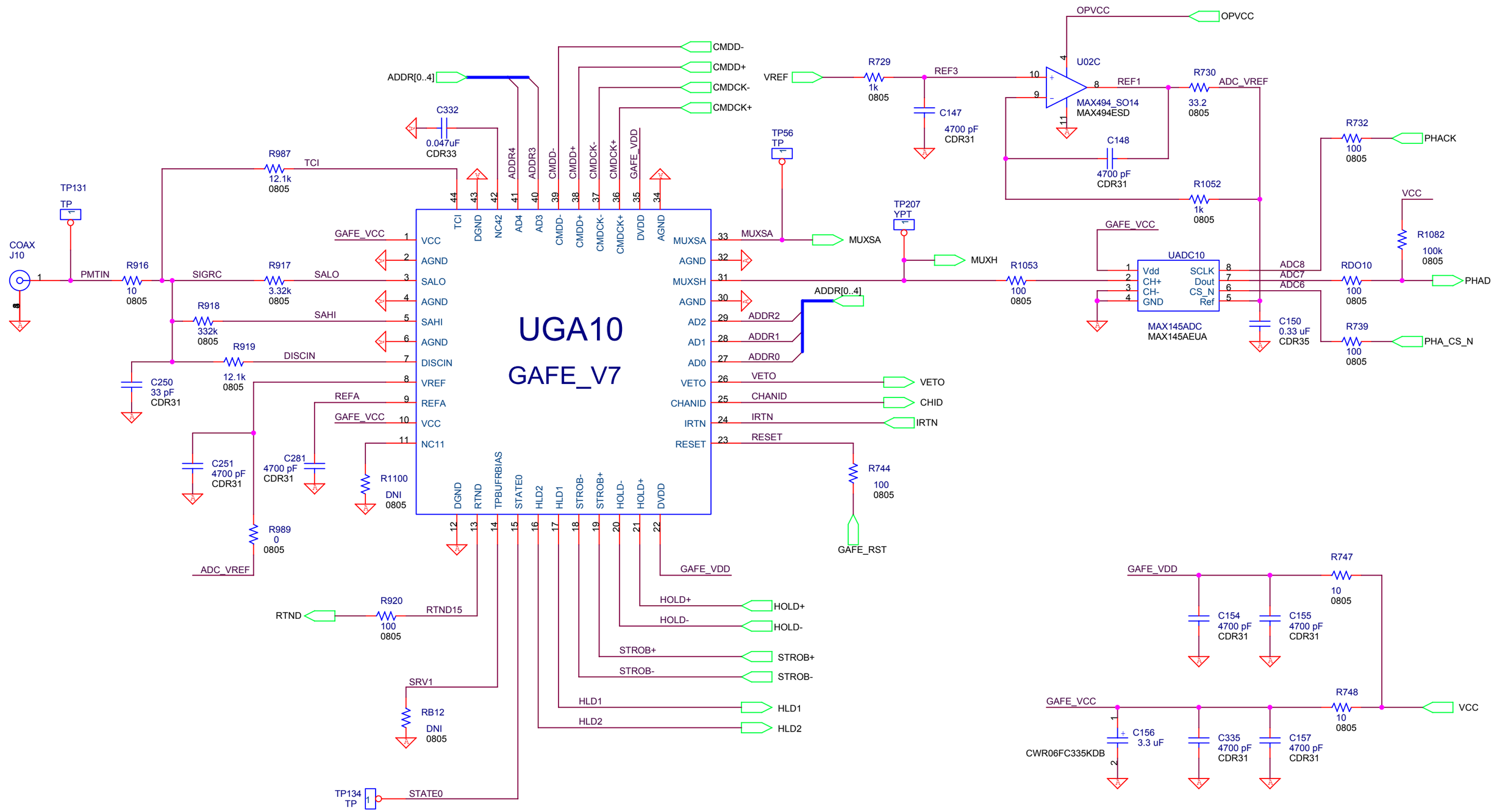

Dave Sheppard, x66539

Title: GLAST ACD GAFE ASIC AND ADC CIRCUIT

Size: B | Document Number: 2061840-12 to -29 | Rev: B

Date: Wednesday, October 29, 2003 | Sheet 23 of 29

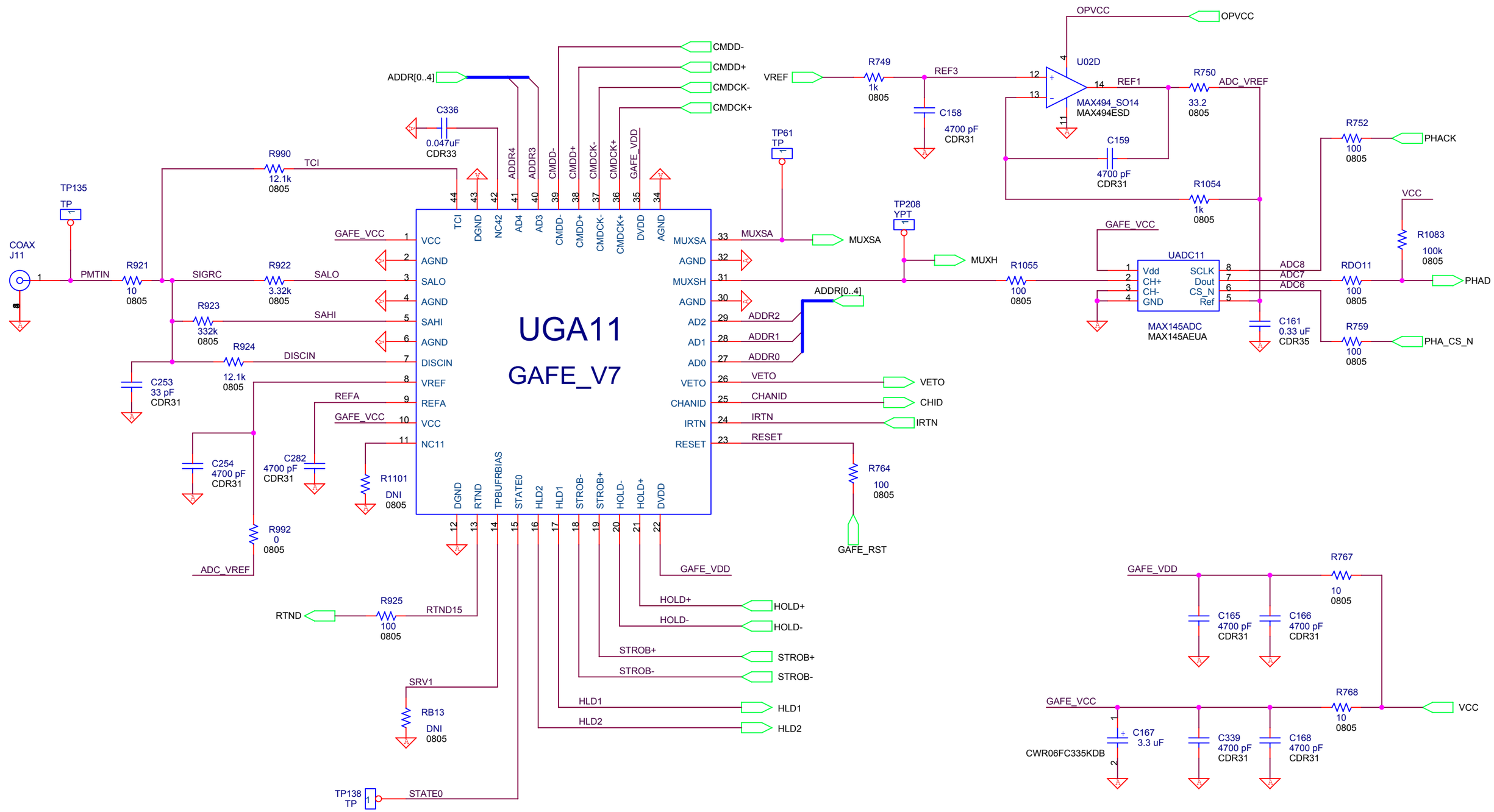

Dave Sheppard, x66539

Title: GLAST ACD GAFE ASIC AND ADC CIRCUIT

Size: B | Document Number: 2061840-12 to -29 | Rev: B

Date: Wednesday, October 29, 2003 | Sheet 24 of 29

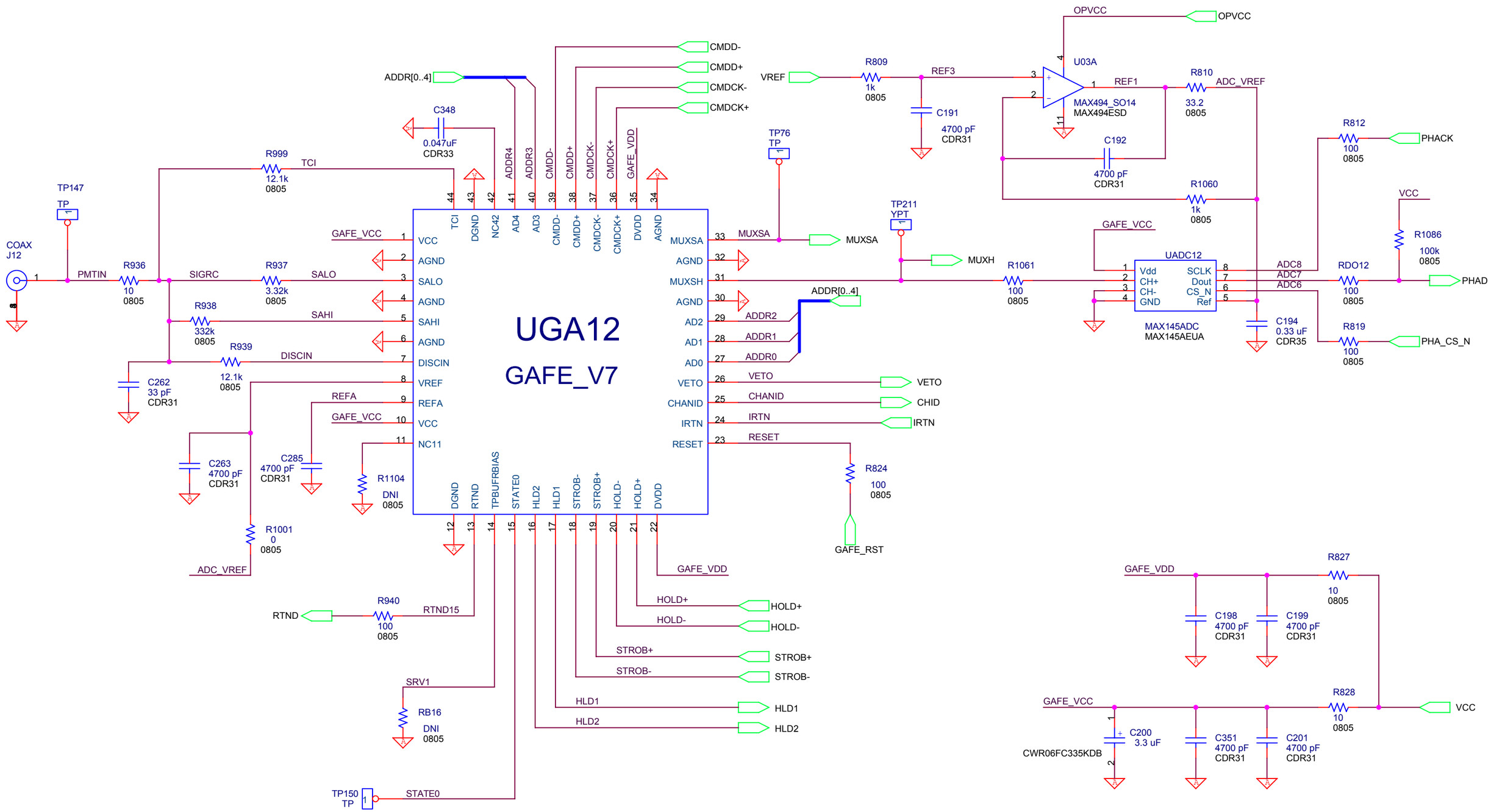

Dave Sheppard, x66539

Title: GLAST ACD GAFE ASIC AND ADC CIRCUIT

Size: B | Document Number: 2061840-12 to -29 | Rev: B

Date: Wednesday, October 29, 2003 | Sheet 25 of 29

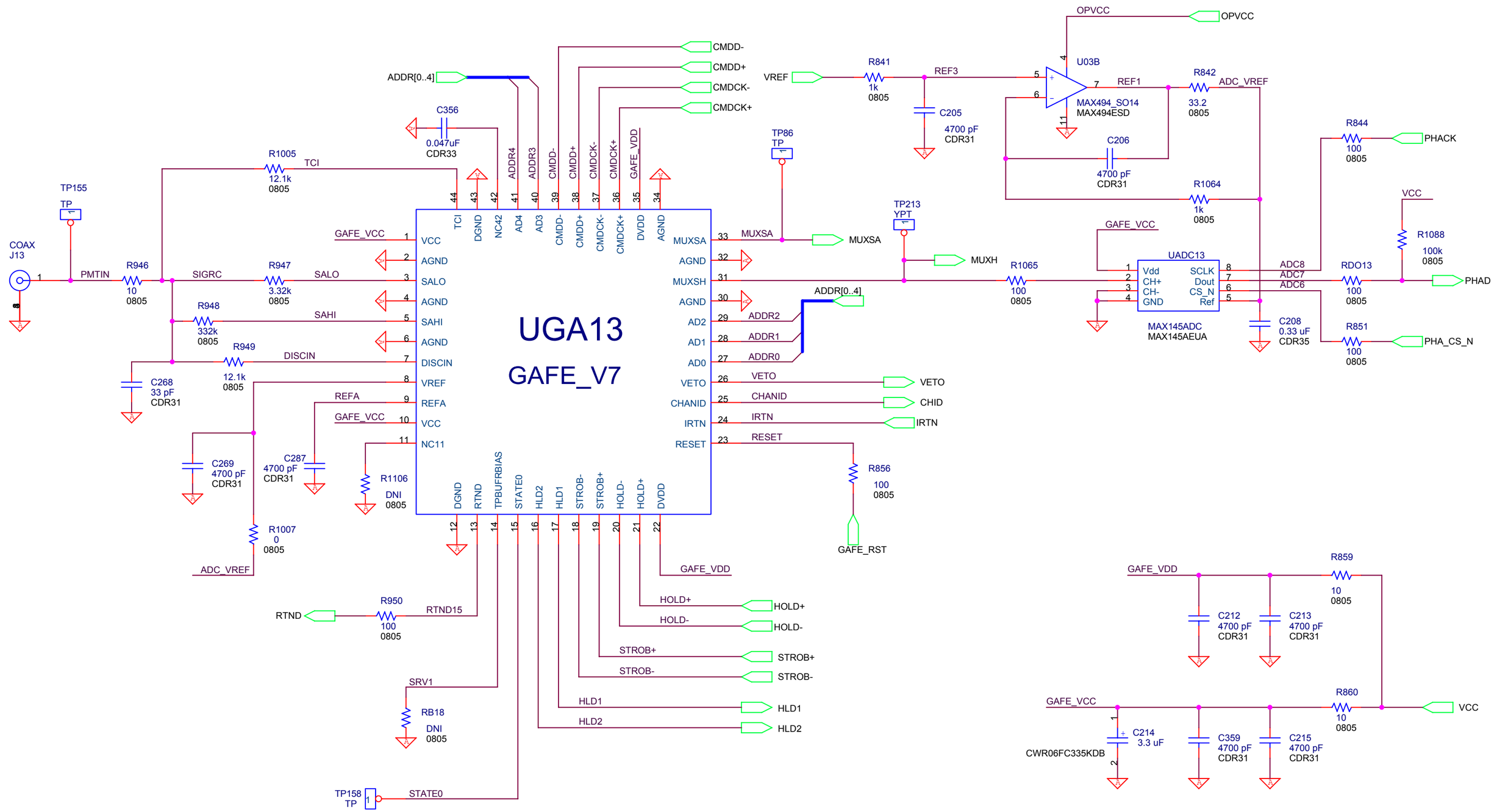

Dave Sheppard, x66539

Title: GLAST ACD GAFE ASIC AND ADC CIRCUIT

Size: B | Document Number: 2061840-12 to -29 | Rev: B

Date: Wednesday, October 29, 2003 | Sheet 26 of 29

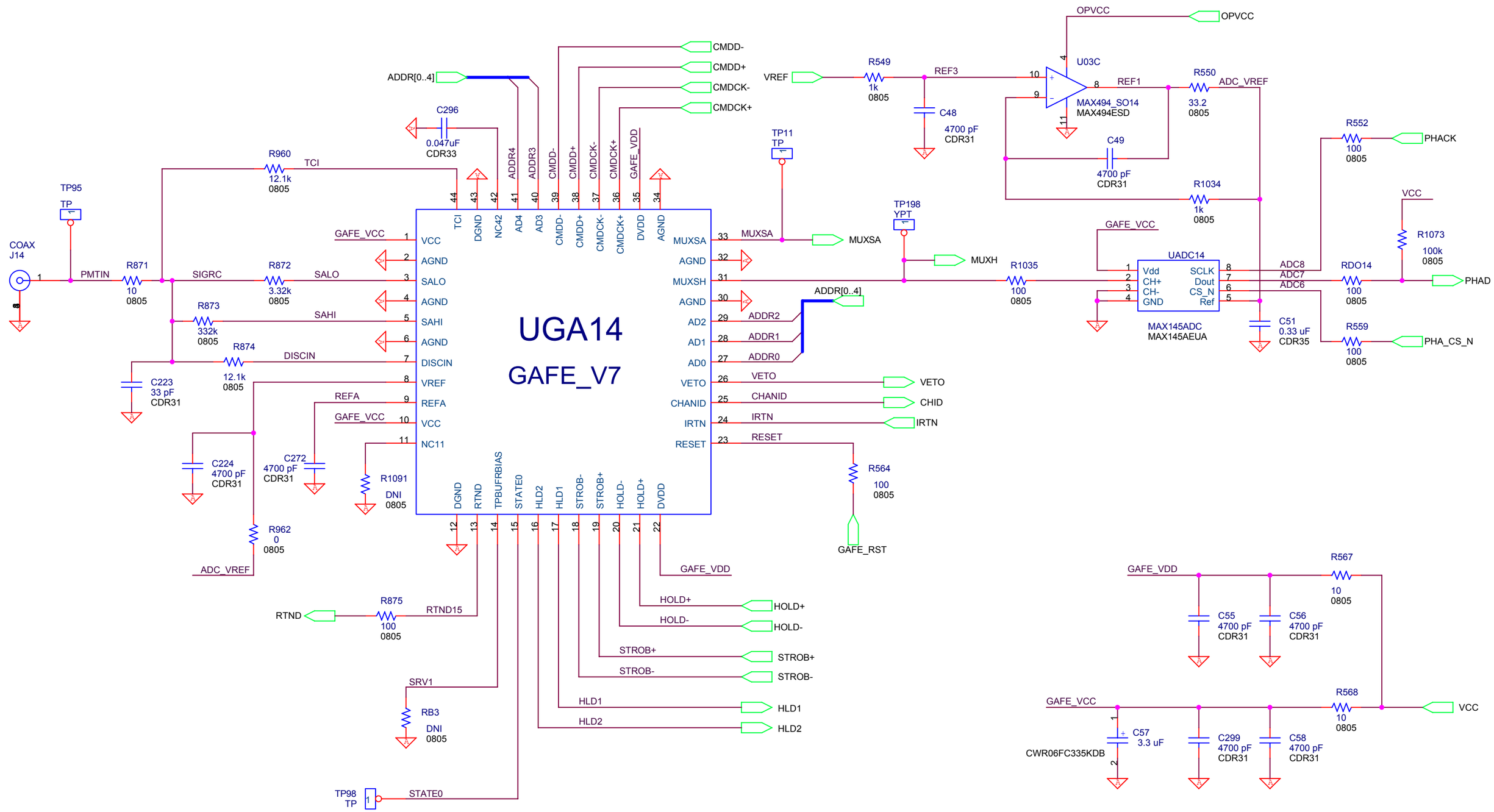

Dave Sheppard, x66539

Title: GLAST ACD GAFE ASIC AND ADC CIRCUIT

Size: B | Document Number: 2061840-12 to -29 | Rev: B

Date: Wednesday, October 29, 2003 | Sheet 27 of 29

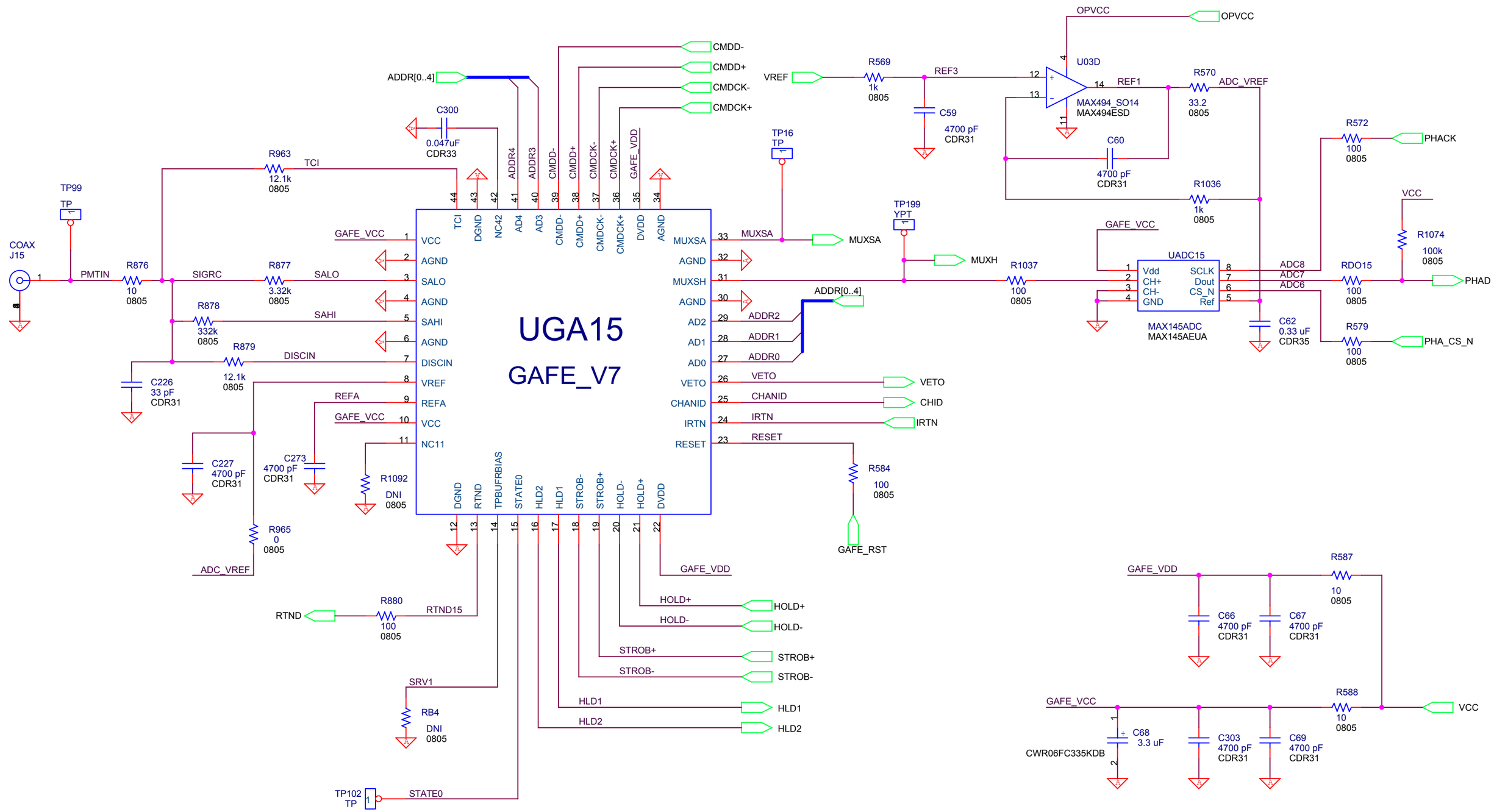

Dave Sheppard, x66539

Title: GLAST ACD GAFE ASIC AND ADC CIRCUIT

Size: B | Document Number: 2061840-12 to -29 | Rev: B

Date: Wednesday, October 29, 2003 | Sheet 28 of 29

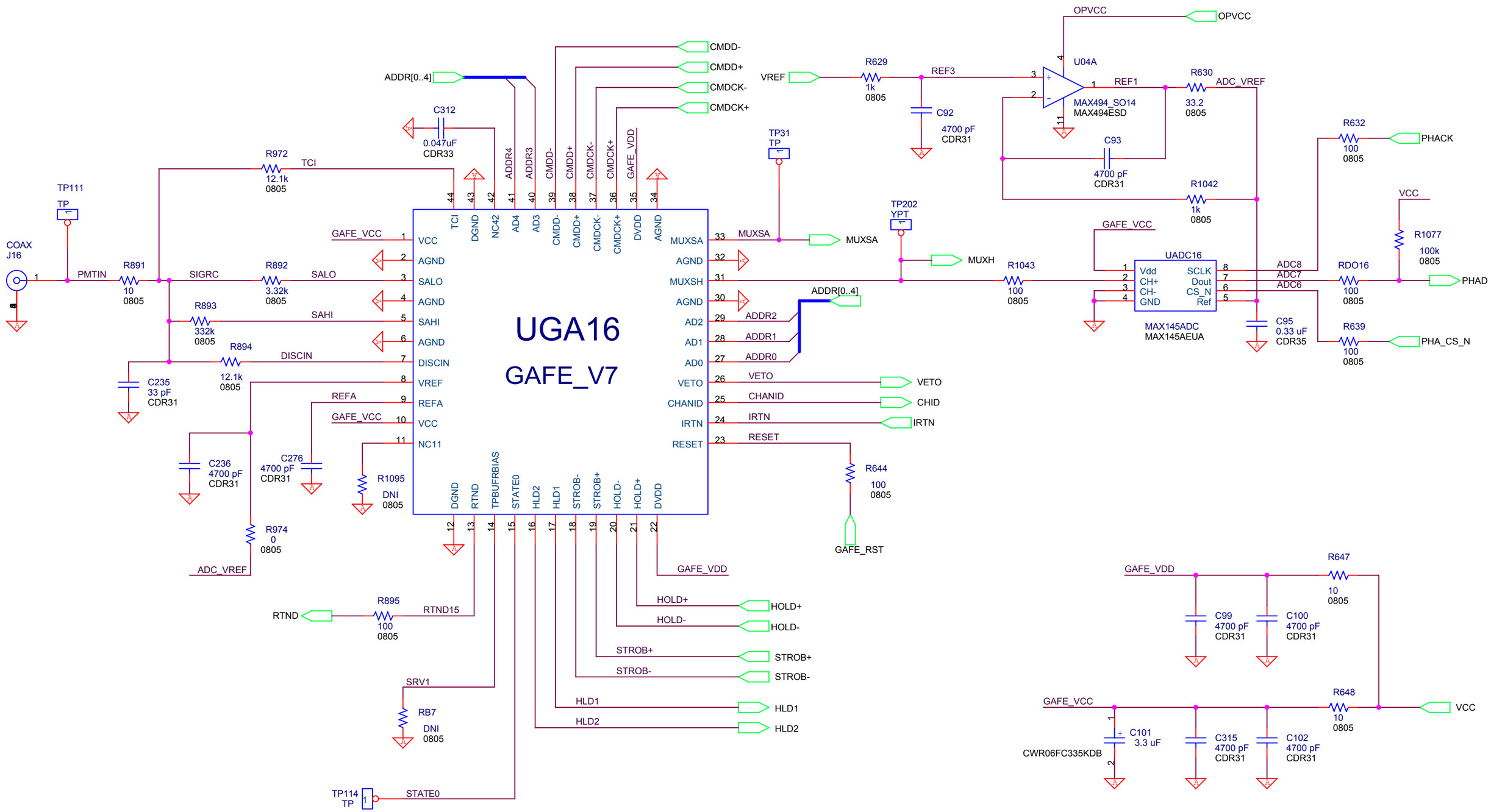

Dave Sheppard, x66539

Title: GLAST ACD GAFE ASIC AND ADC CIRCUIT

Size: B | Document Number: 2061840-12 to -29 | Rev: B

Date: Wednesday, October 29, 2003 | Sheet 29 of 29

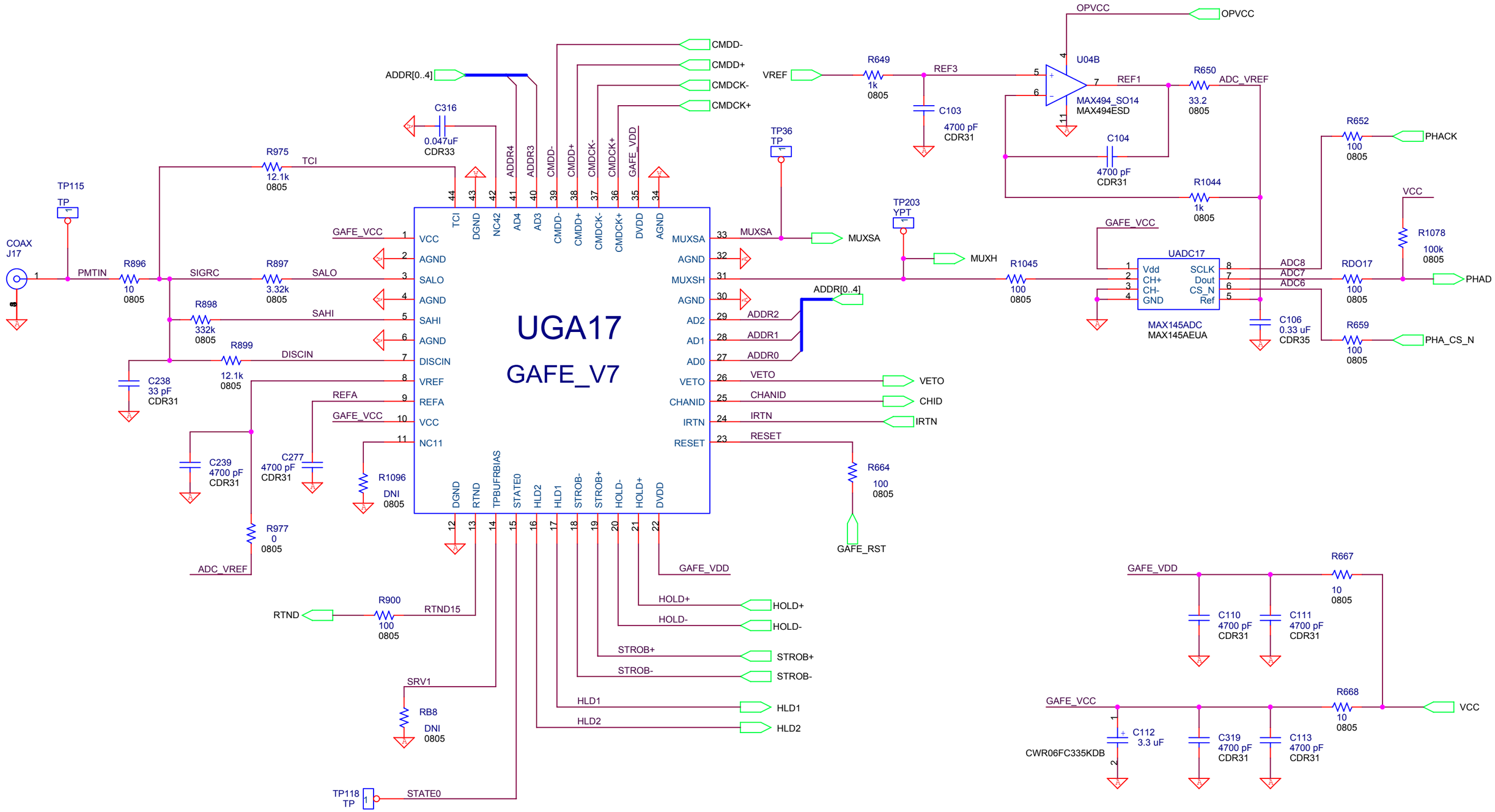

Dave Sheppard, x66539

Title: GLAST ACD GAFE ASIC AND ADC CIRCUIT

Size: B | Document Number: 2061840-12 to -29 | Rev: B

Date: Wednesday, October 29, 2003 | Sheet 30 of 29