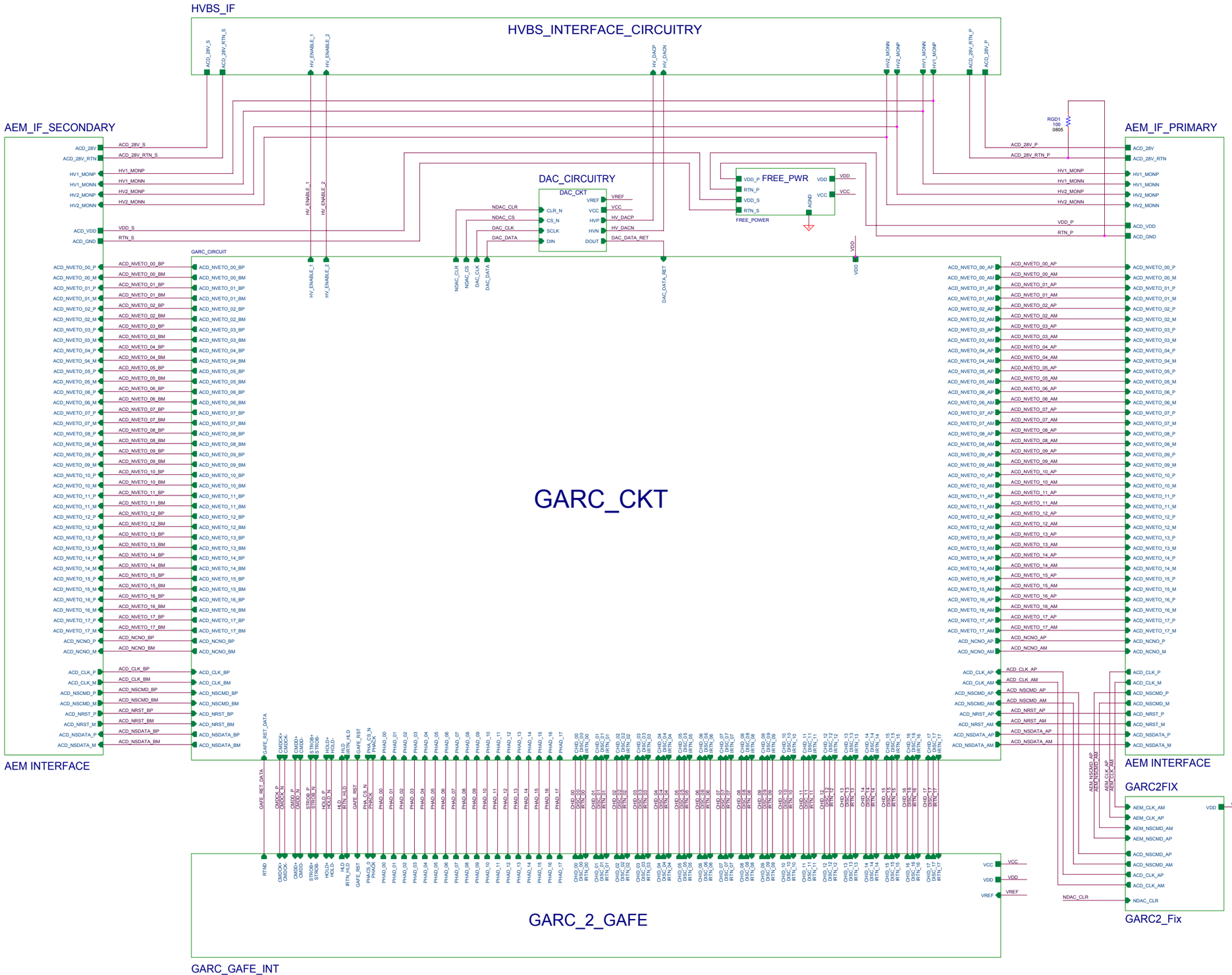

Schematic Pages for ACD FREE (TOTAL = 30)

Page 1: FREE_TOP_SCHEMATIC
Page 2: HVBS_INTERFACE_CIRCUITRY
Page 3: DAC_CIRCUITRY
Page 4: AEM_IF_PRIMARY
Page 5: AEM_IF_SECONDARY
Page 6: FREE_PWR
Page 7: GARC_CKT
Page 8: GARC_2_GAFE
Page 9: FREE_ID_CKT
Page 10: RST_CKT
Page 11: ADDRESS_BUSSES
Page 12_00: GAFE_CHANNEL_00
Page 12_01 GAFE_CHANNEL_01
Page 12_02: GAFE_CHANNEL_02
Page 12_03: GAFE_CHANNEL_03
Page 12_04: GAFE_CHANNEL_04
Page 12_05: GAFE_CHANNEL_05
Page 12_06: GAFE_CHANNEL_06
Page 12_07: GAFE_CHANNEL_07
Page 12_08: GAFE_CHANNEL_08
Page 12_09: GAFE_CHANNEL_09
Page 12_10: GAFE_CHANNEL_10
Page 12_11: GAFE_CHANNEL_11
Page 12_12: GAFE_CHANNEL_12
Page 12_13: GAFE_CHANNEL_13
Page 12_14: GAFE_CHANNEL_14
Page 12_15: GAFE_CHANNEL_15
Page 12_16: GAFE_CHANNEL_16
Page 12_17: GAFE_CHANNEL_17
Page 30: GARC2_FIX

GLAST The Gamma Ray Large Area Space Telescope

Designer: D. Sheppard

Approved: G. Unger

NASA Goddard Space Flight Center
Laboratory for High Energy Astrophysics
Greenbelt, Maryland 20771

Dave Sheppard / x6539

GAMMA-RAY LARGE AREA SPACE TELESCOPE (GLAST)
ANTI-COINCIDENCE DETECTOR (ACD)
FRONT-END EVENT ELECTRONICS (FREE)

FRONT END EVENT ELECTRONICS (FREE) PCB

"Sure, we could have designed a better board, but it couldn't have taken any longer"

Thursday, May 22, 2003

Size	CAGE Code	DWG NO	Rev
D	<Cage Code>	2061840-01	-

Scale

Sheet 1 of 30

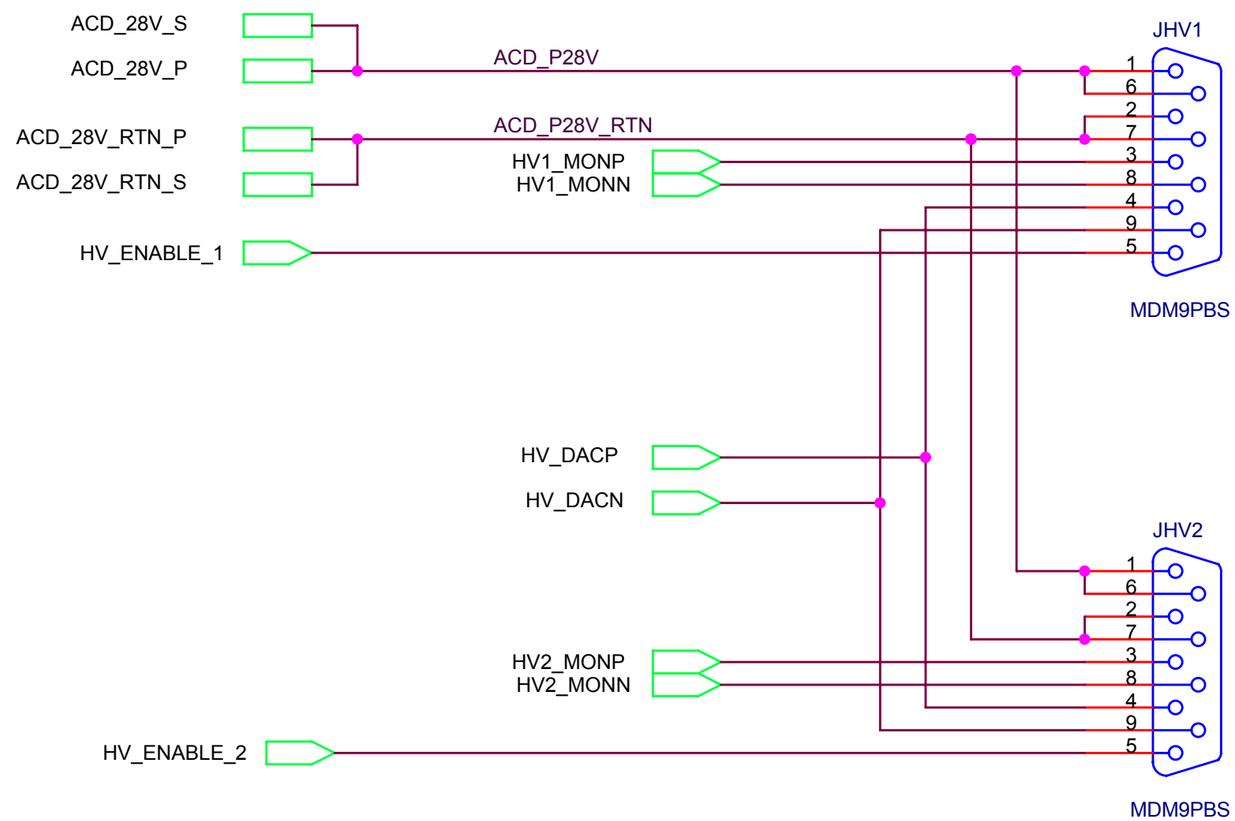

Dave Sheppard, x66539

Title
HVBS INTERFACE CIRCUITRY

Size	Document Number	Rev
A	2061840-02	-

Date: Thursday, May 22, 2003 Sheet 2 of 30

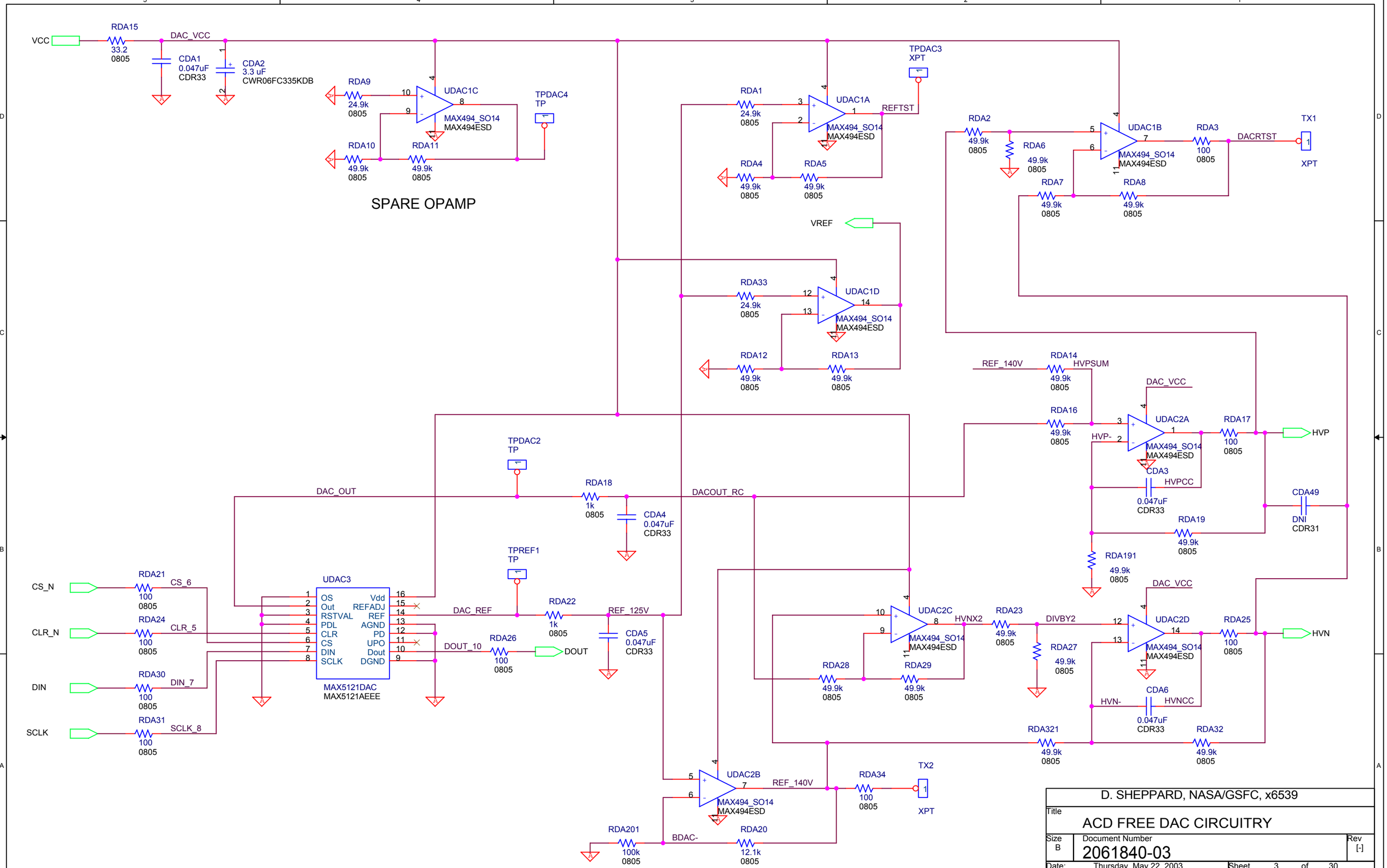

D. SHEPPARD, NASA/GSFC, x6539

Title: ACD FREE DAC CIRCUITRY

Size: B | Document Number: 2061840-03 | Rev: [-]

Date: Thursday, May 22, 2003 | Sheet 3 of 30

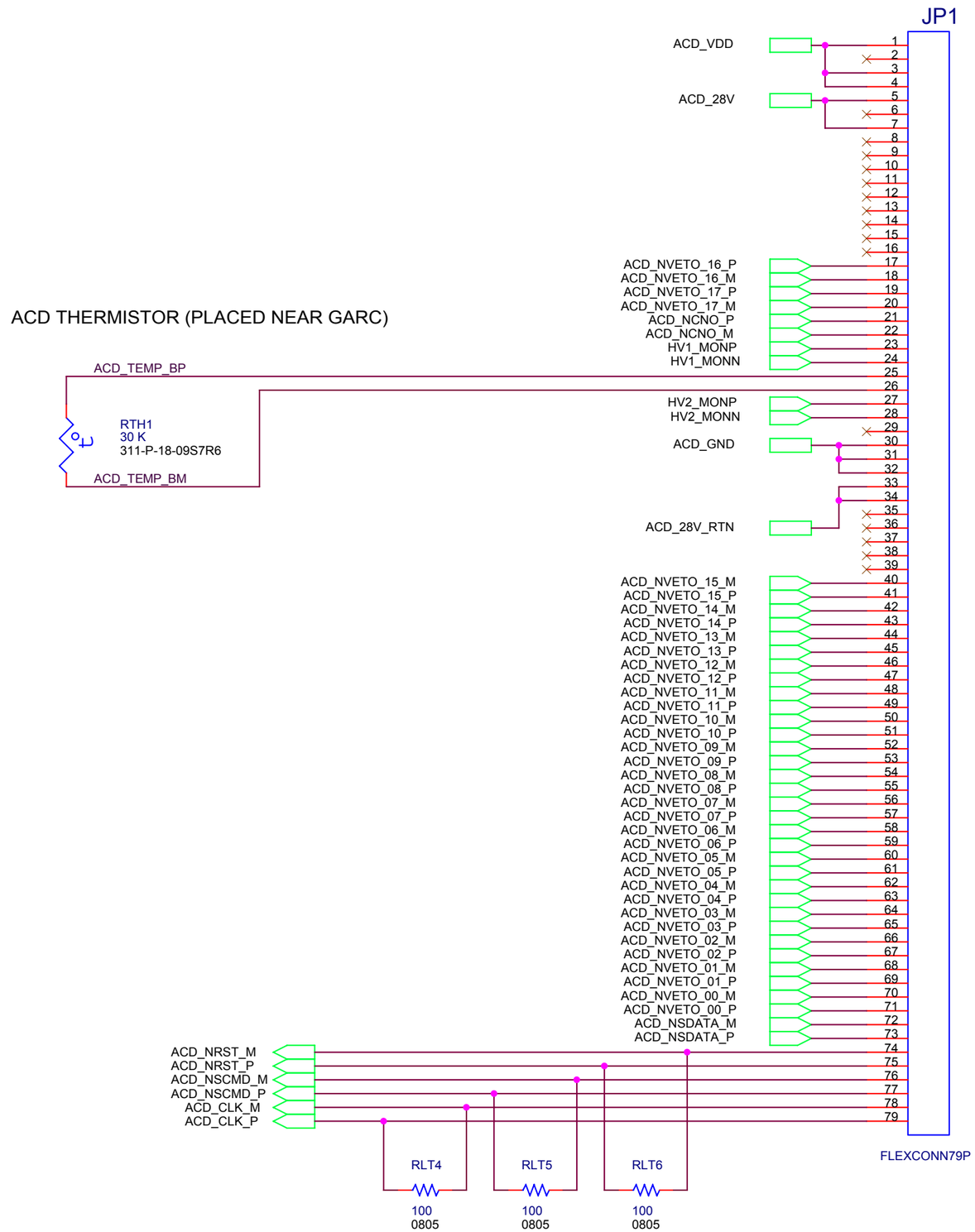

Dave Sheppard, x66539

Title	ACD AEM INTERFACE CONNECTOR	
Size B	Document Number 2061840-04 and -05	Rev [-]
Date: Thursday, May 22, 2003	Sheet 4 of 30	

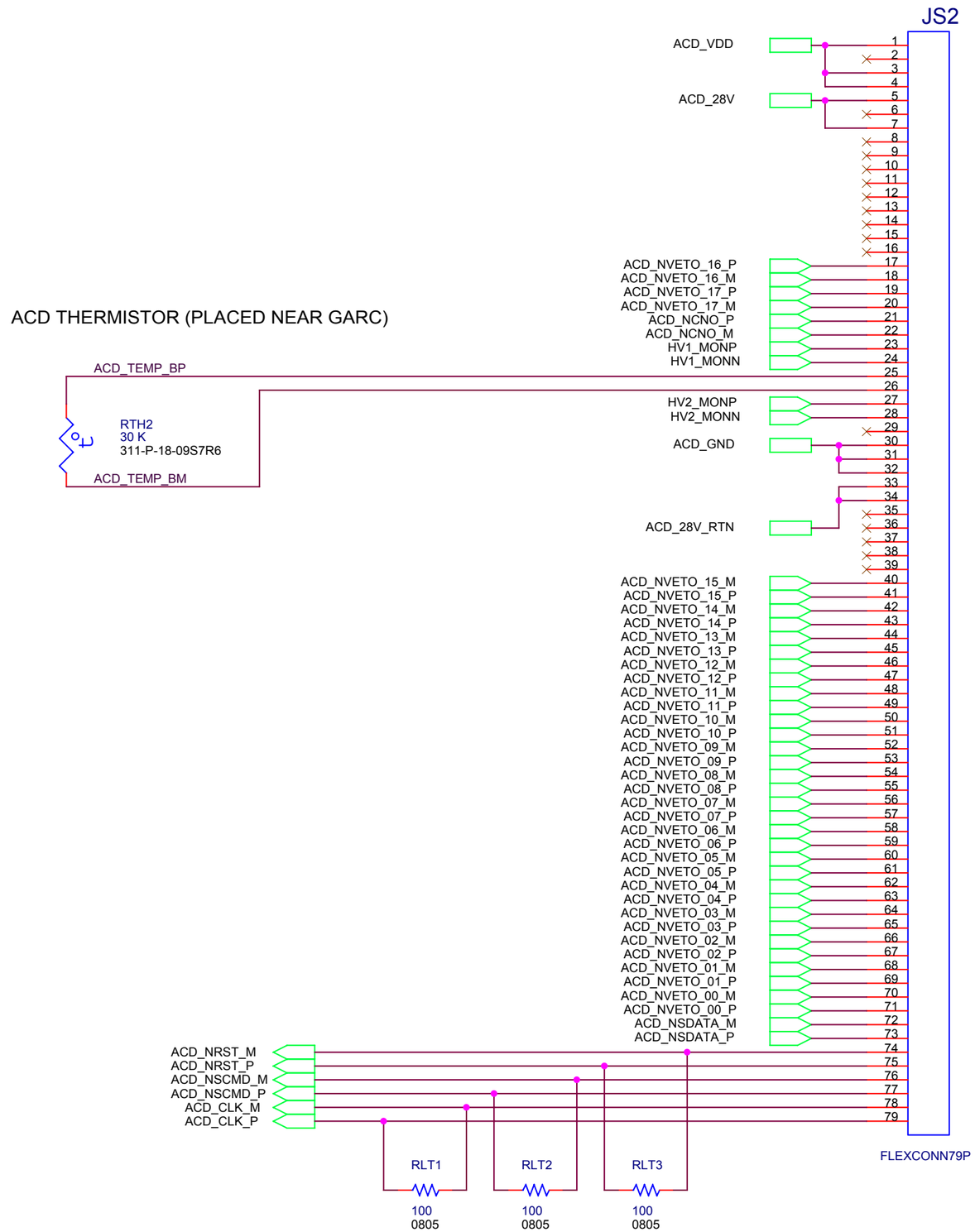

Dave Sheppard, x66539

Title	ACD AEM INTERFACE CONNECTOR	
Size B	Document Number 2061840-04 and -05	Rev [-]
Date: Thursday, May 22, 2003	Sheet 5 of 30	

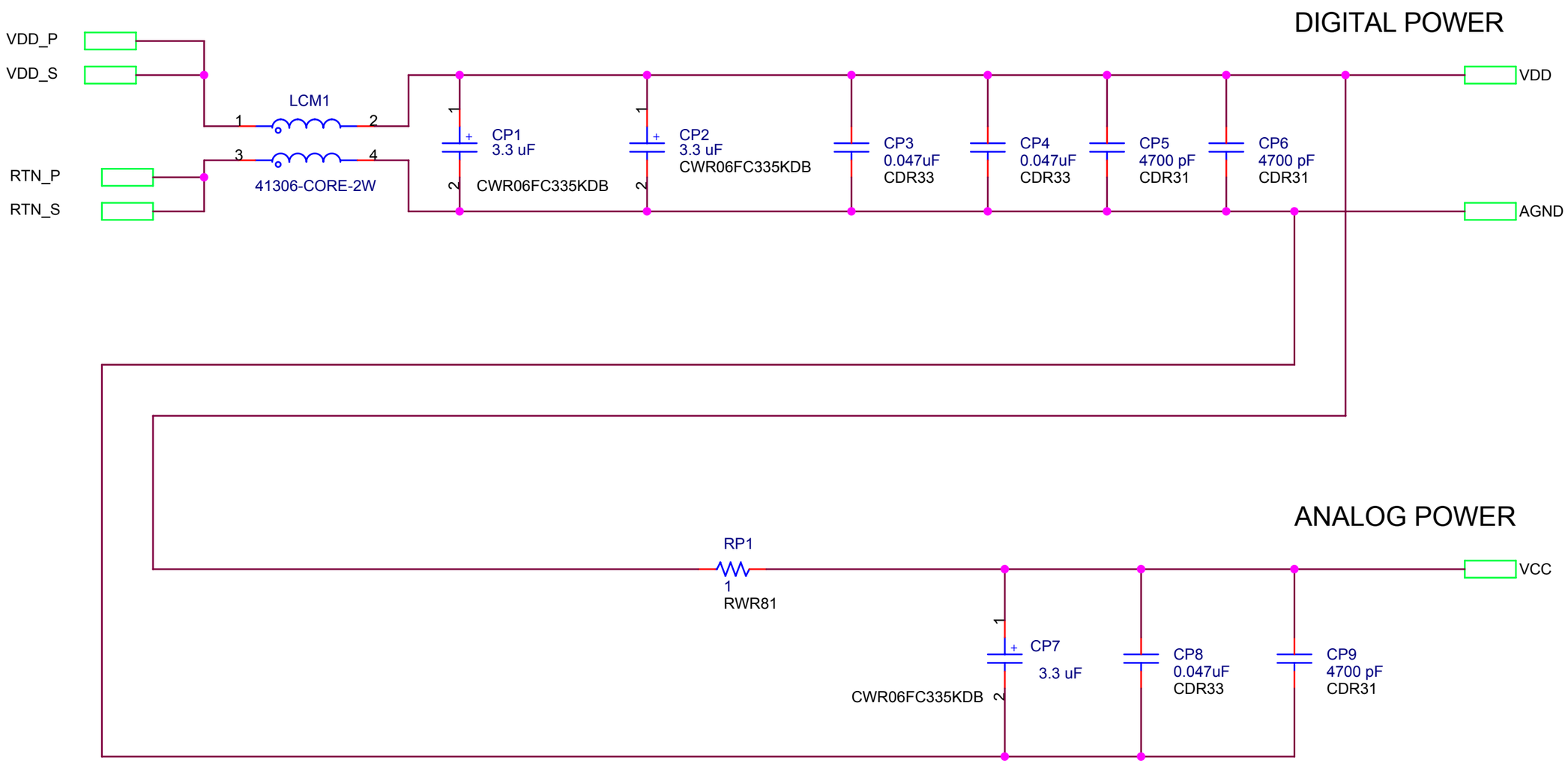

D. SHEPPARD, NASA/GSFC, x6539

Title: FREE POWER FILTERING CIRCUITRY

Size	Document Number	Rev
A	2061840-06	-

Date: Thursday, May 22, 2003 | Sheet 6 of 30

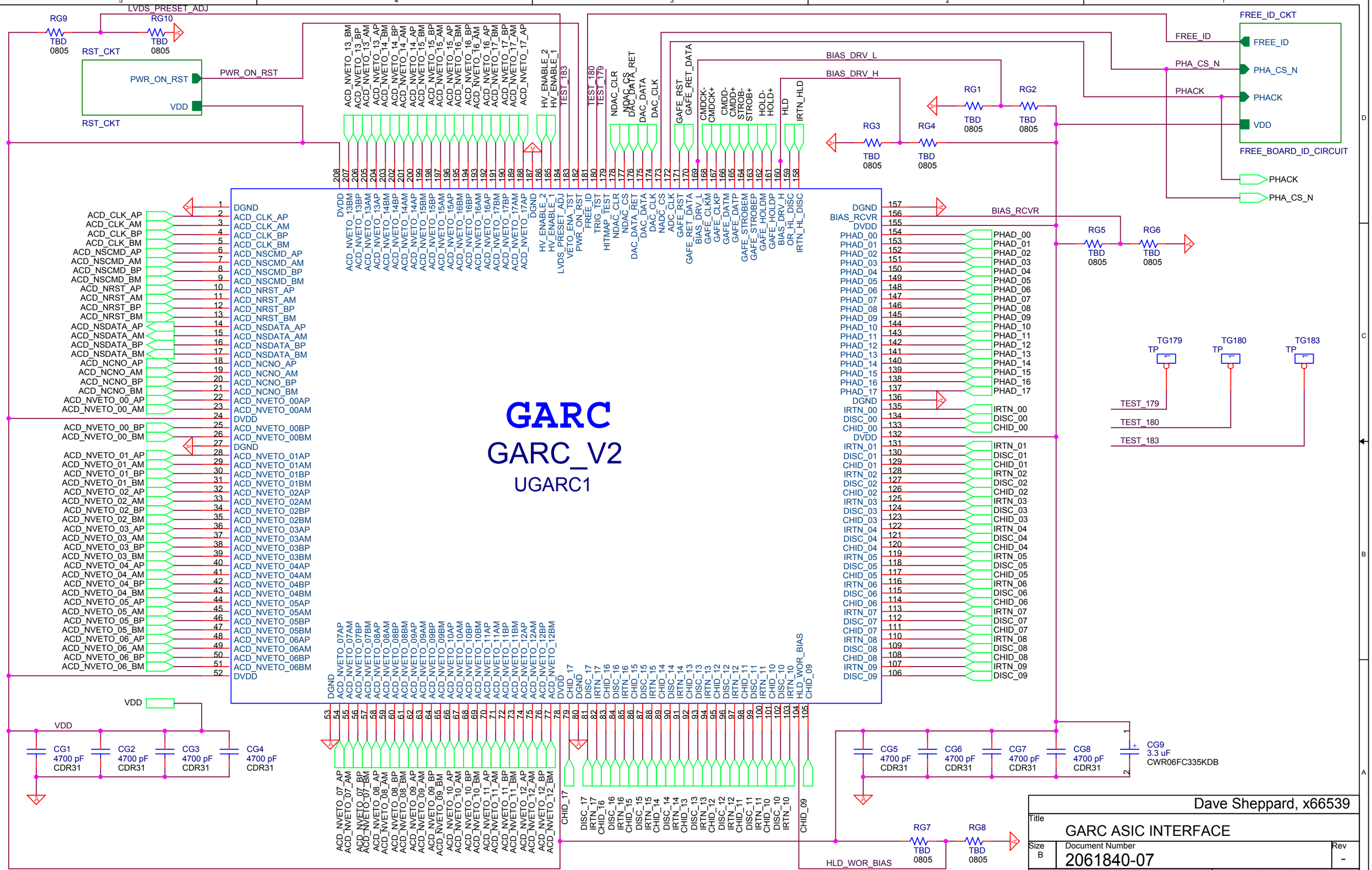

Dave Sheppard, x66539

Title: GARC ASIC INTERFACE

Size: B | Document Number: 2061840-07 | Rev: -

Date: Thursday, May 22, 2003 | Sheet 7 of 30

18 GAFE Channels

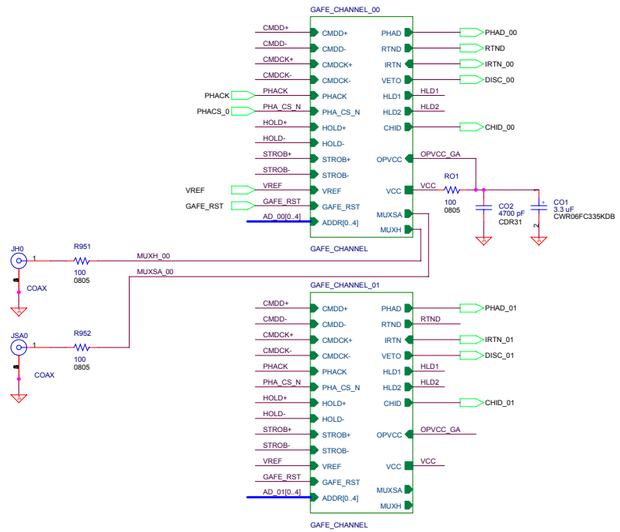

CHANNEL GROUP
00 & 01

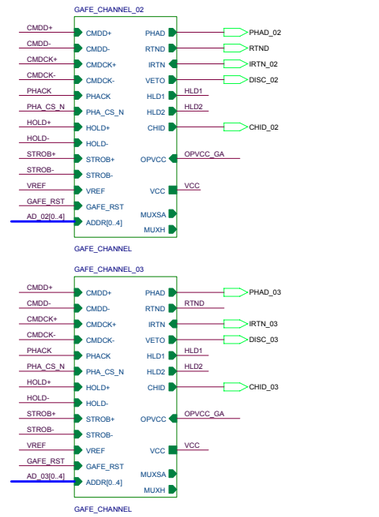

CHANNEL GROUP
02 & 03

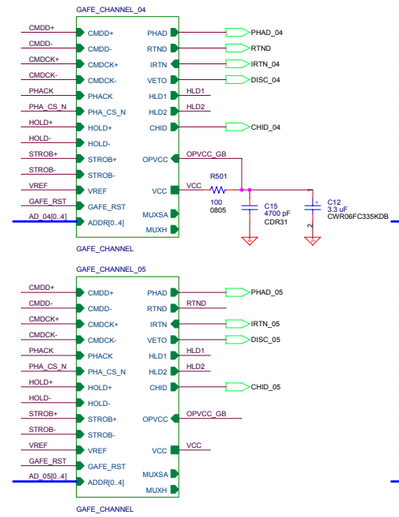

CHANNEL GROUP
04 & 05

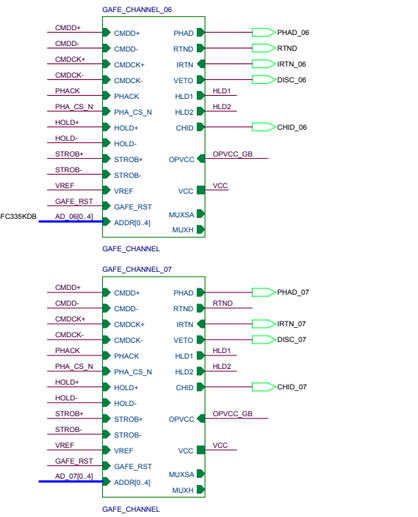

CHANNEL GROUP
06 & 07

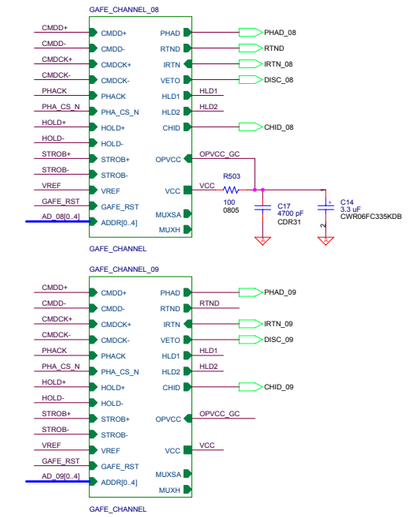

CHANNEL GROUP
08 & 09

TERMINATIONS FOR COMMON DIFFERENTIAL GAFE SIGNALS

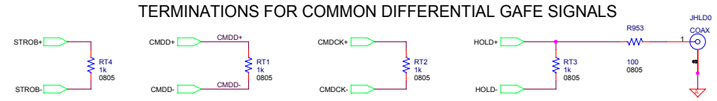

PULLUP/PULLDN RESISTORS FOR GAFE ADDRESSING

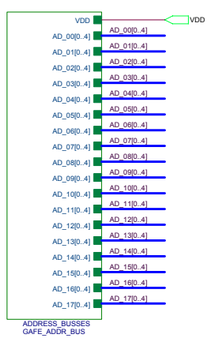

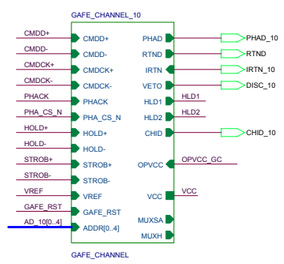

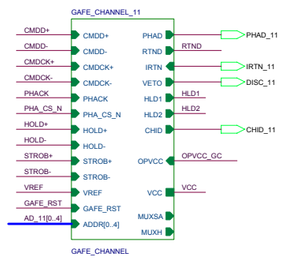

CHANNEL GROUP
10 & 11

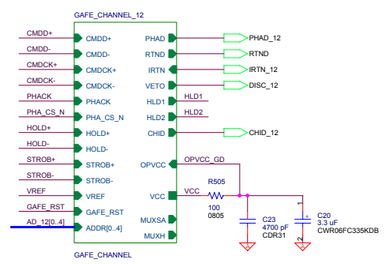

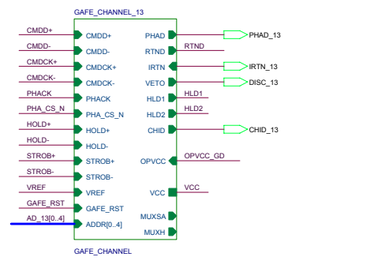

CHANNEL GROUP
12 & 13

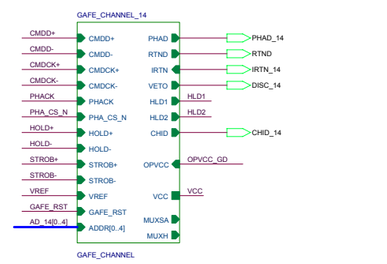

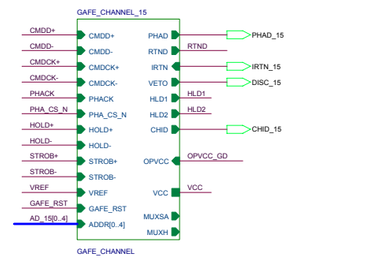

CHANNEL GROUP
14 & 15

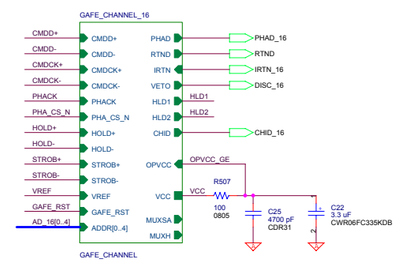

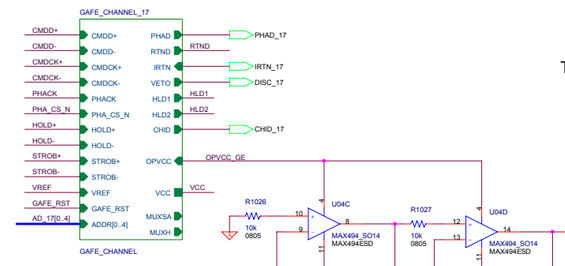

CHANNEL GROUP
16 & 17

HLD-RELATED TERMINATIONS

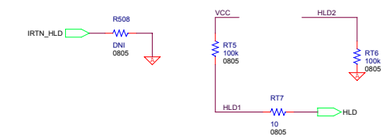

TEST POINTS, POWER AND GROUND

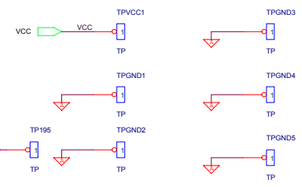

Dave Sheppard, x66539	
Title: GARC 2 GAFE SCHEMATIC	
Size: D	Document Number: 2061840-08	Rev: -
Date: Thursday, May 22, 2003	Sheet 8 of 30

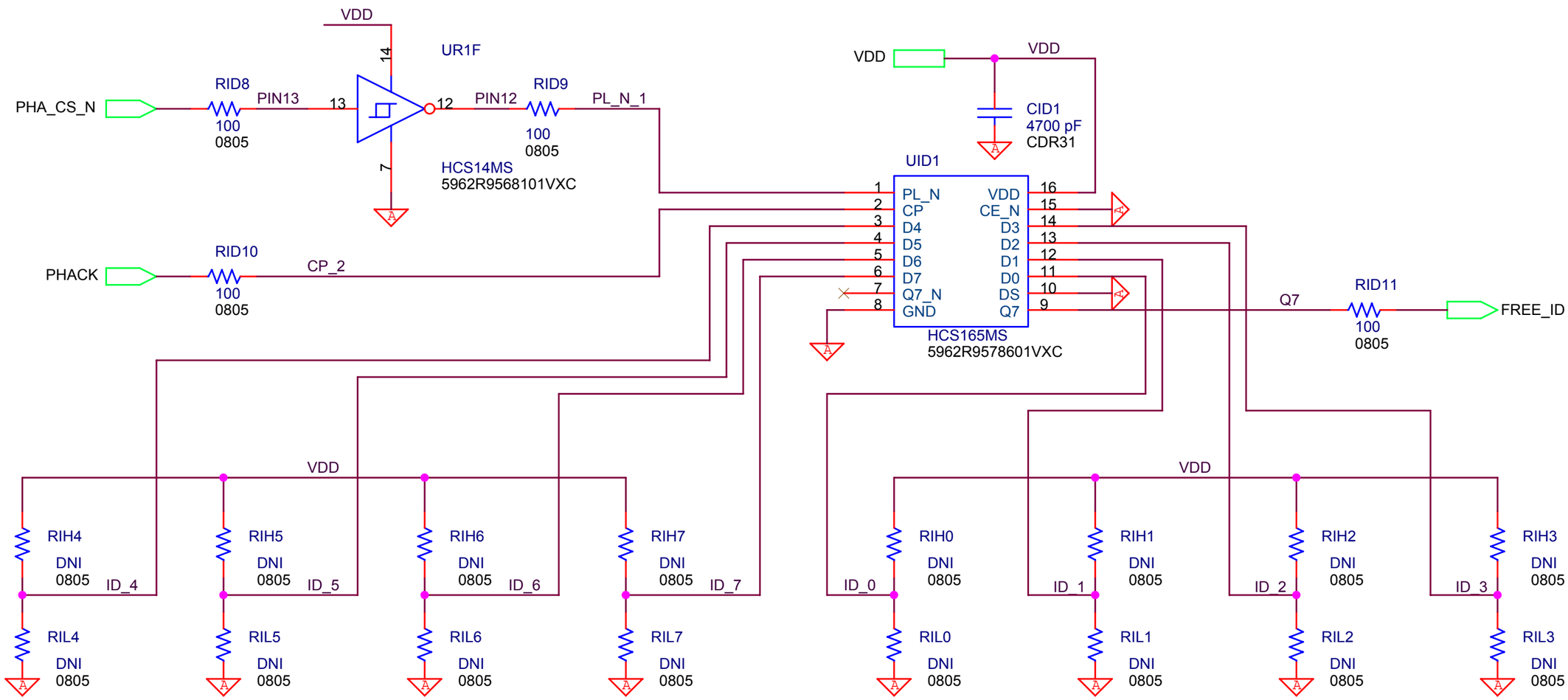

FREE BOARD ID CODE

BIT 7 - RESERVED (NOMINAL = 0)

BITS [6:5] - PCB STATUS INDICATOR (00 = BREADBOARD, 01 = EM, 10 = FLIGHT, 11 = RESERVED)

BITS [4:0] - PCB SERIAL NUMBER (AS PER WOA)

D. Sheppard, x66539

Title: FREE BOARD IDENTIFICATION CIRCUIT

Size	Document Number	Rev
A	2061840-09	-

Date: Thursday, May 22, 2003 | Sheet 9 of 30

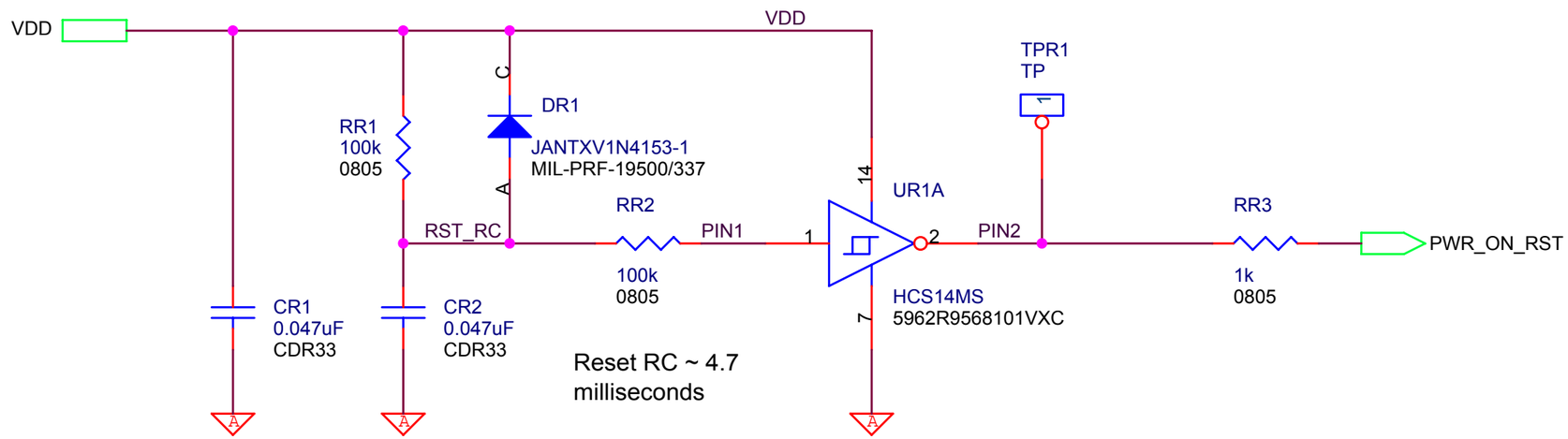

Dave Sheppard, x66539

Title
ACD FREE Reset Circuit

Size	Document Number	Rev
A	2061840-10	[-]

Date: Thursday, May 22, 2003 Sheet 10 of 30

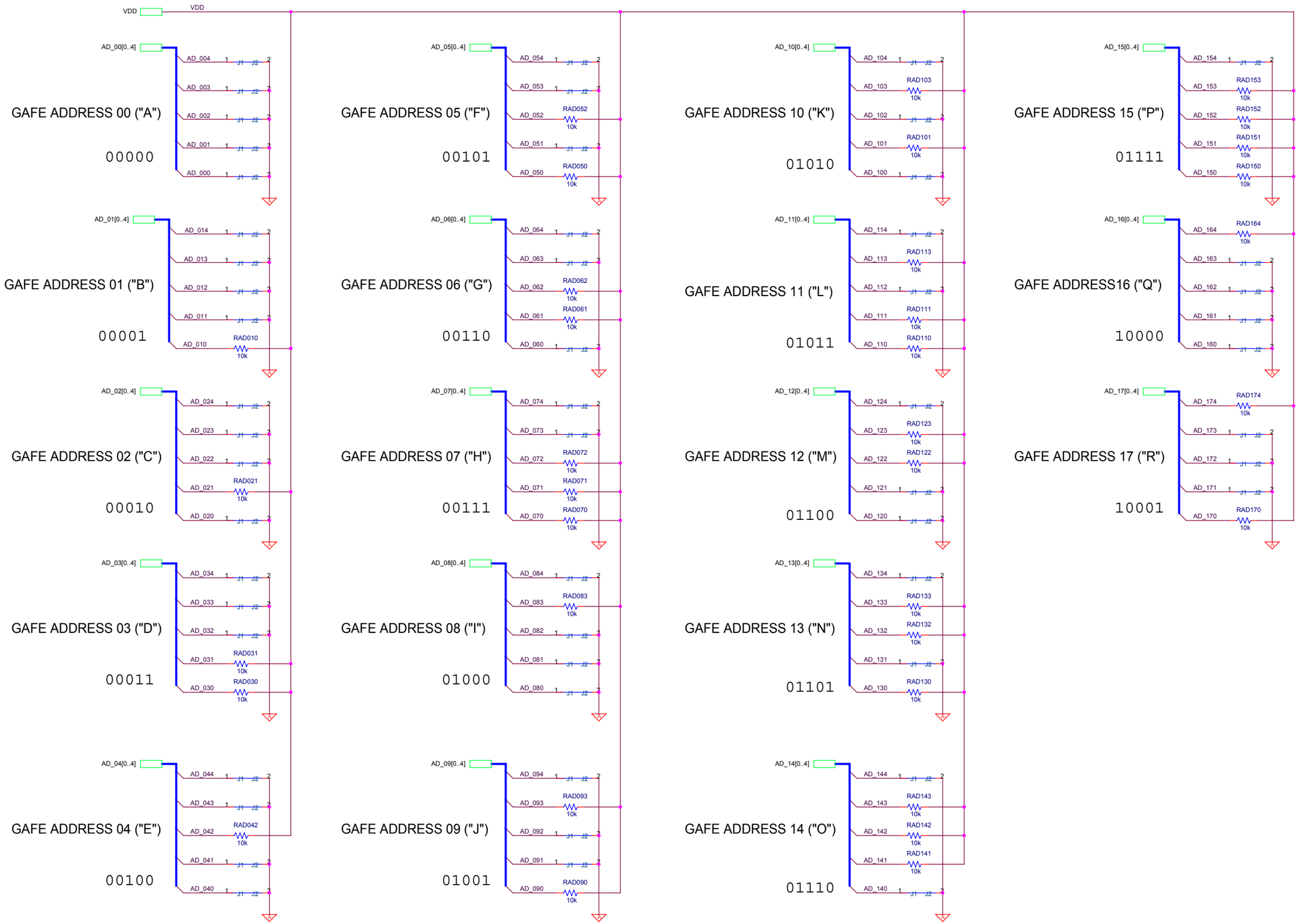

Dave Sheppard, X66539

Title	GLAST ACD		
Size C	Document Number 2061840-11		Rev -
Date: Thursday, May 22, 2003	Sheet 11 of 30		

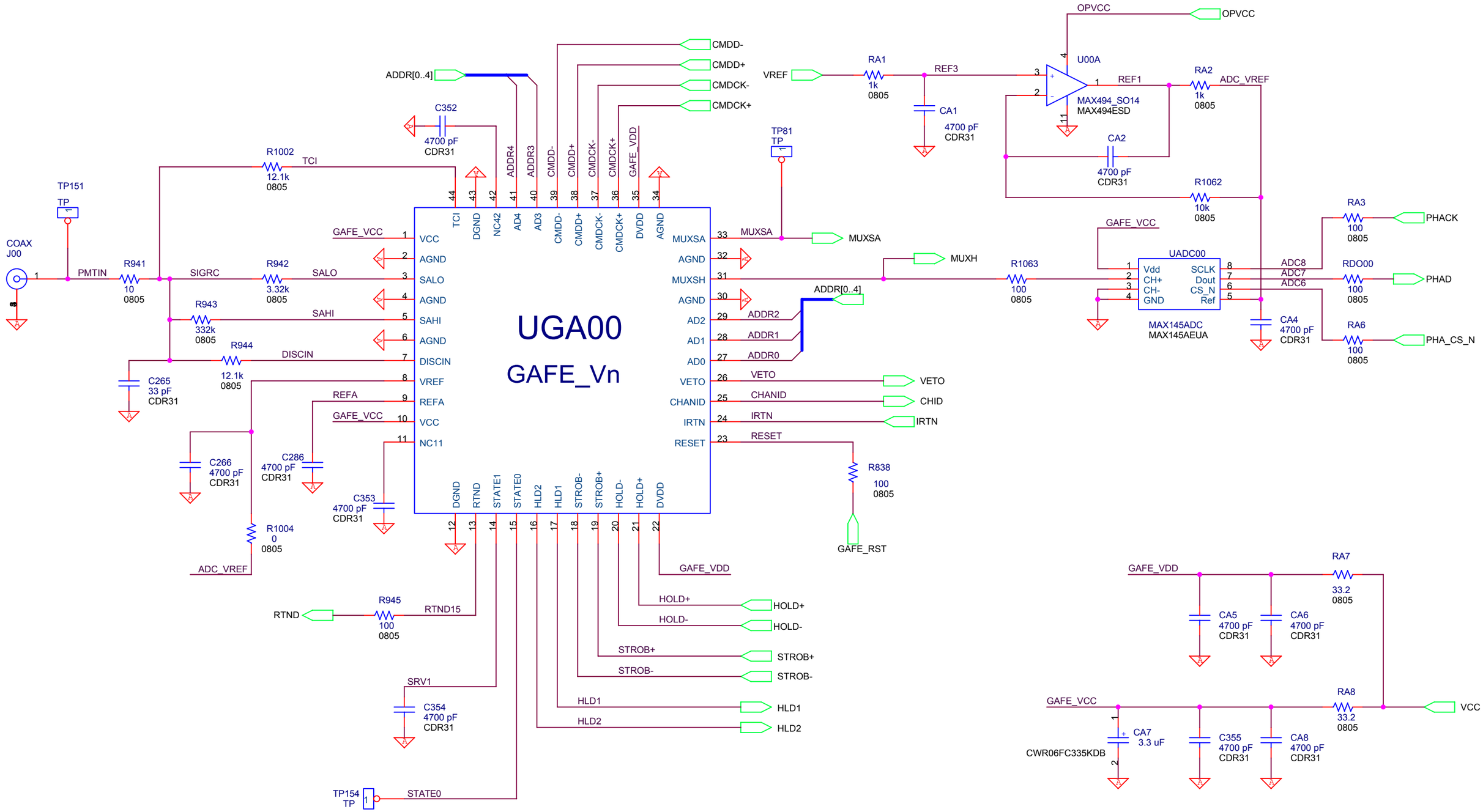

Dave Sheppard, x66539

Title: GLAST ACD GAFE ASIC AND ADC CIRCUIT

Size: B | Document Number: 2061840-12 to -29 | Rev: -

Date: Thursday, May 22, 2003 | Sheet 13 of 30

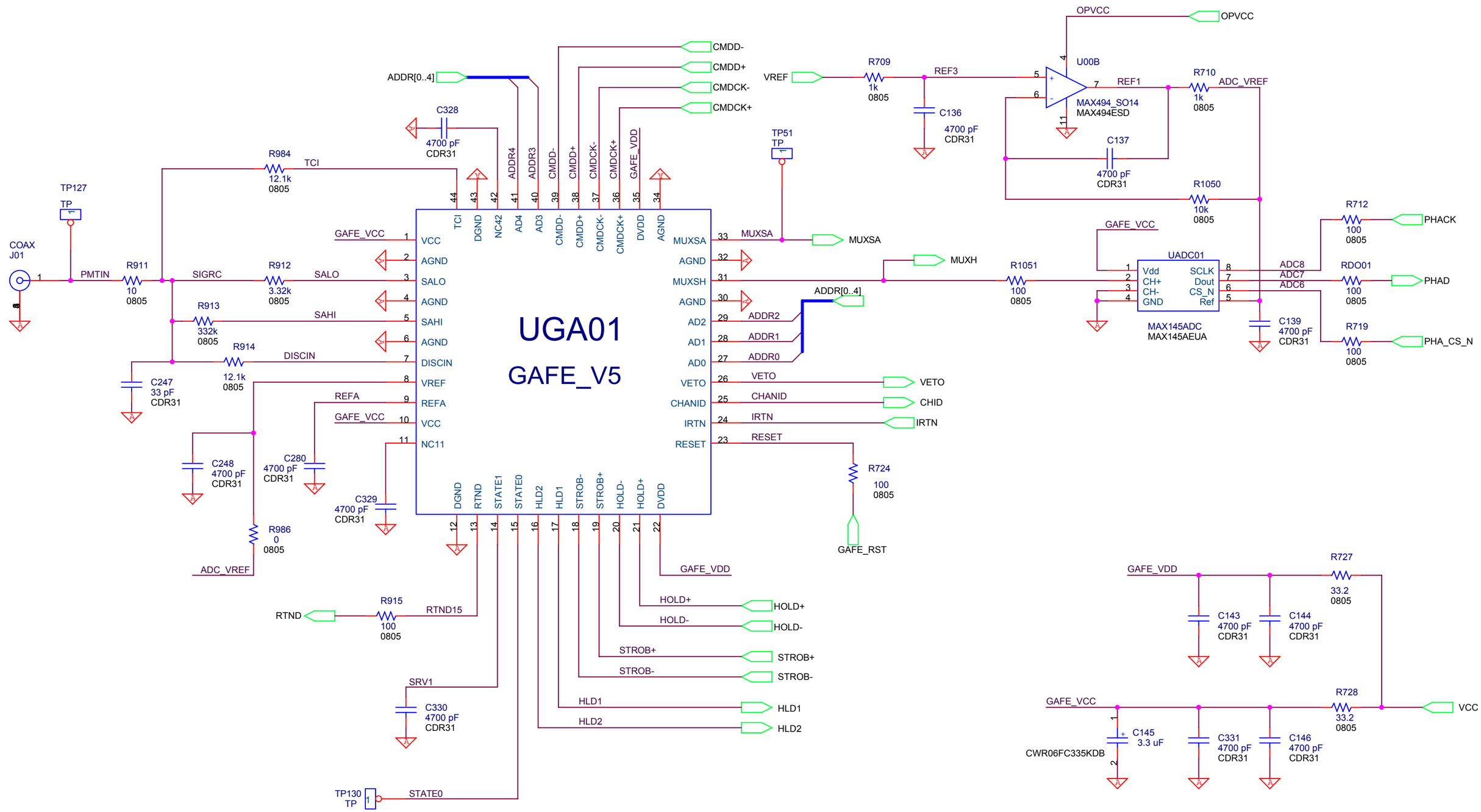

Dave Sheppard, x66539

Title: GLAST ACD GAFE ASIC AND ADC CIRCUIT

Size: B | Document Number: 2061840-12 to -29 | Rev: -

Date: Thursday, May 22, 2003 | Sheet 14 of 30

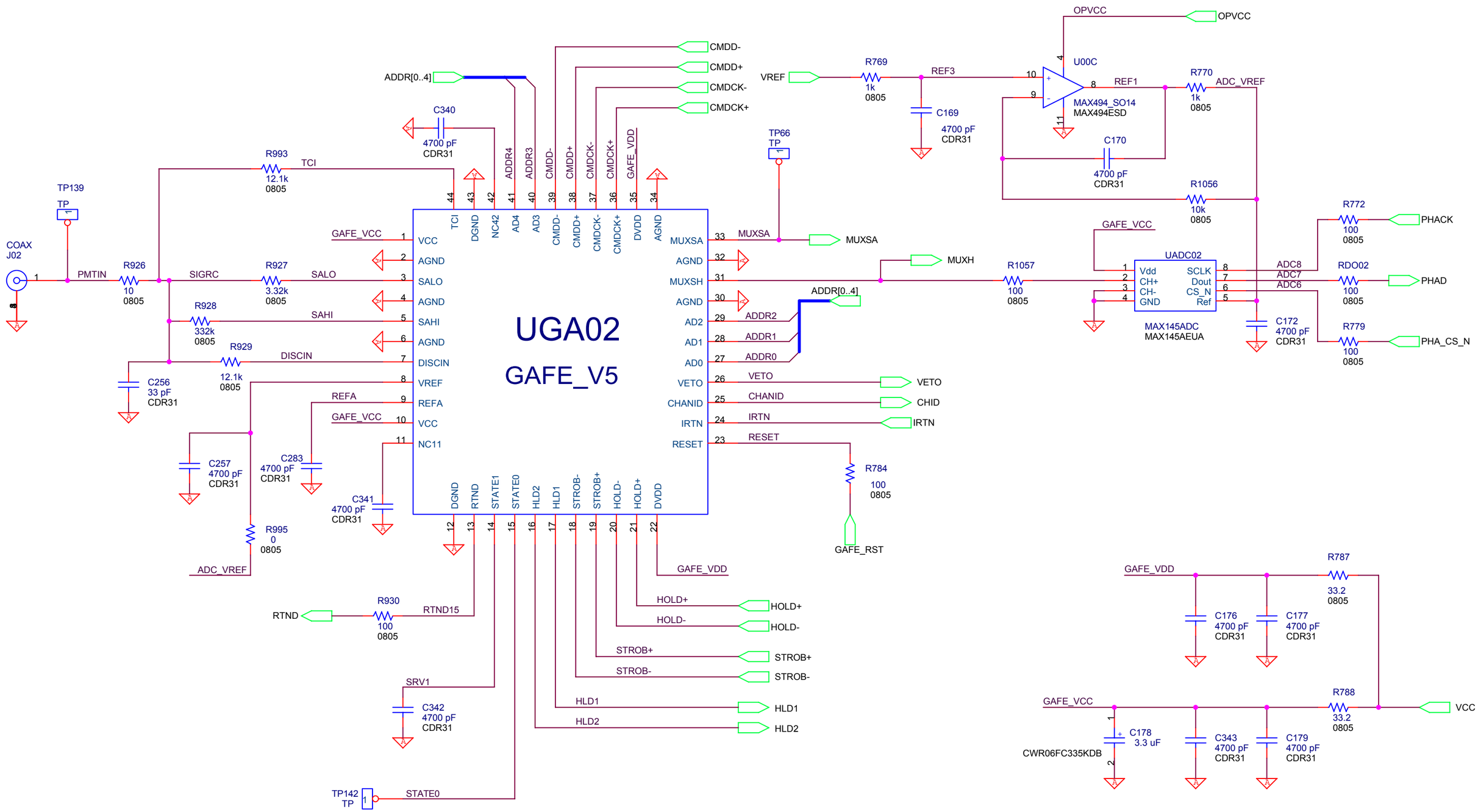

Dave Sheppard, x66539

Title: GLAST ACD GAFE ASIC AND ADC CIRCUIT

Size: B | Document Number: 2061840-12 to -29 | Rev: -

Date: Thursday, May 22, 2003 | Sheet 15 of 30

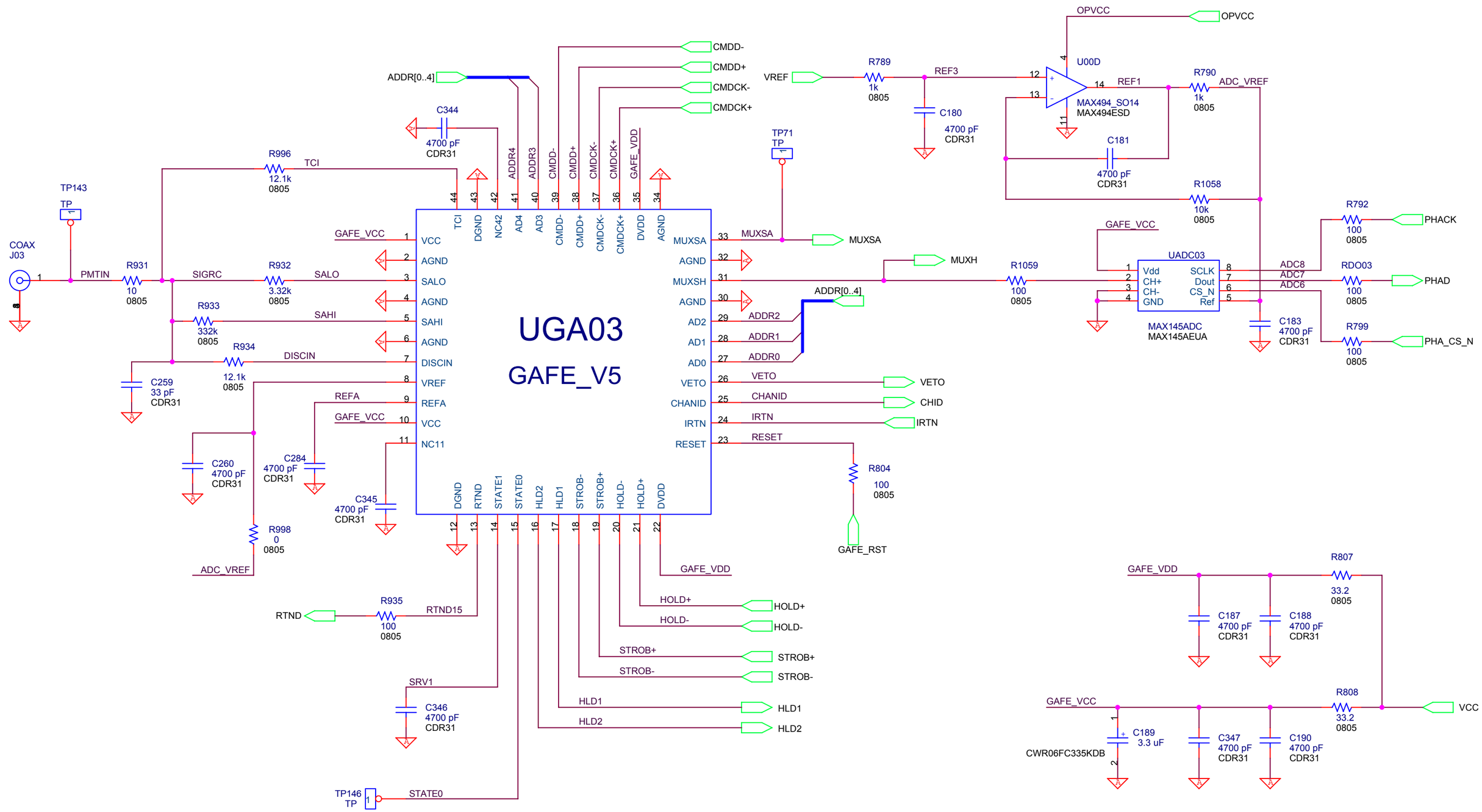

Dave Sheppard, x66539

Title: GLAST ACD GAFE ASIC AND ADC CIRCUIT

Size: B | Document Number: 2061840-12 to -29 | Rev: -

Date: Thursday, May 22, 2003 | Sheet 16 of 30

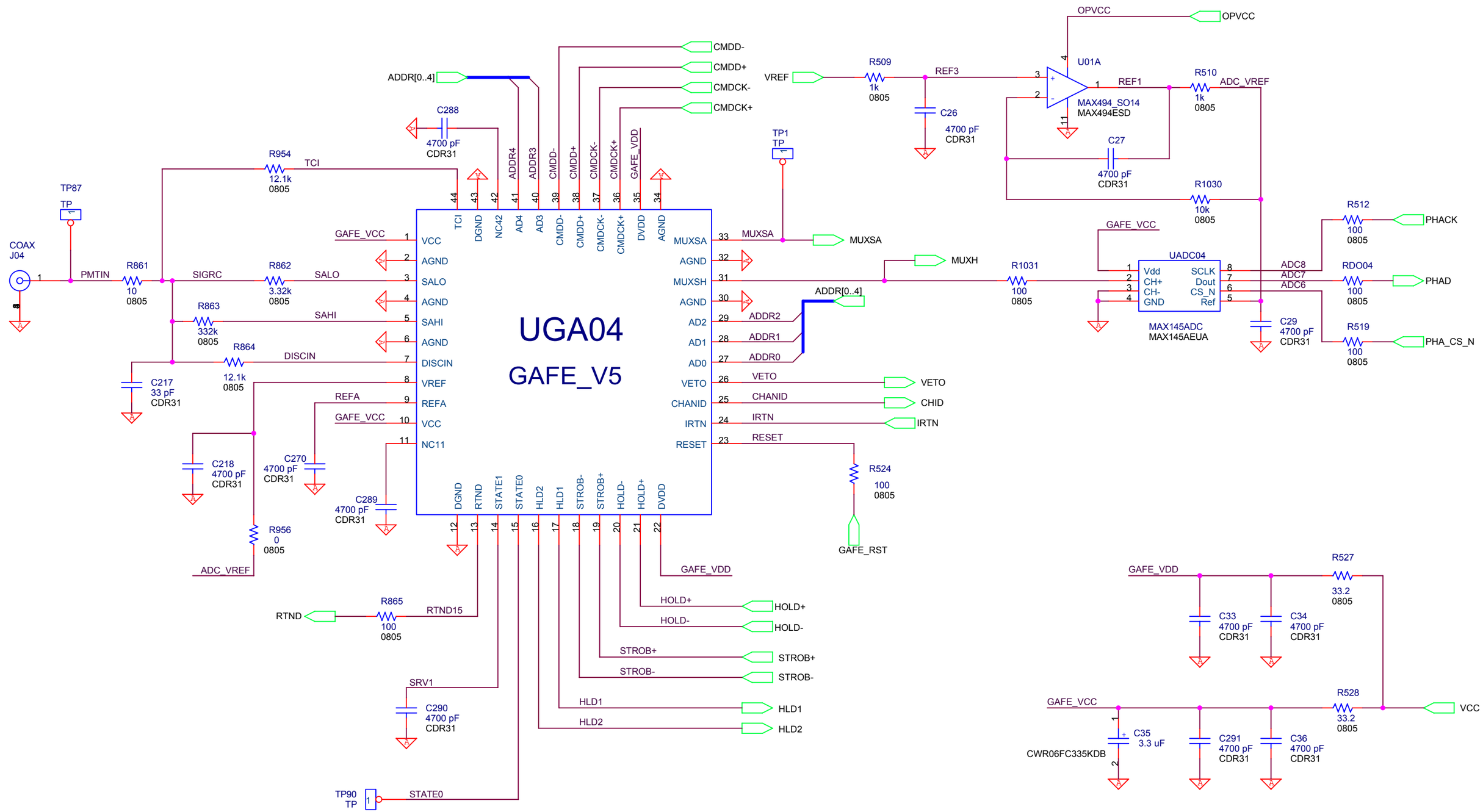

Dave Sheppard, x66539

Title: GLAST ACD GAFE ASIC AND ADC CIRCUIT

Size: B | Document Number: 2061840-12 to -29 | Rev: -

Date: Thursday, May 22, 2003 | Sheet 17 of 30

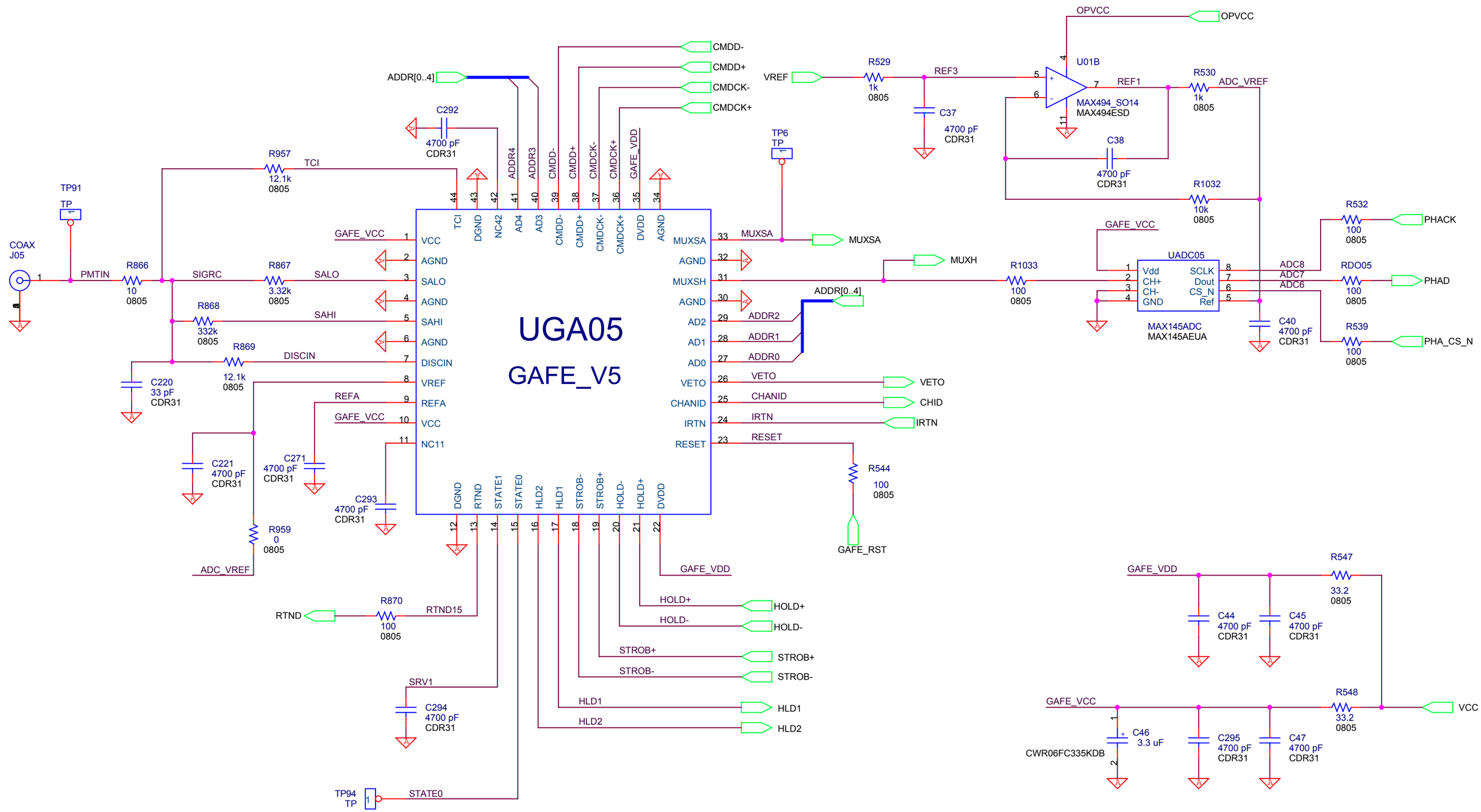

Dave Sheppard, x66539

Title: GLAST ACD GAFE ASIC AND ADC CIRCUIT

Size	Document Number	Rev
B	2061840-12 to -29	-

Date: Thursday, May 22, 2003 Sheet 18 of 30

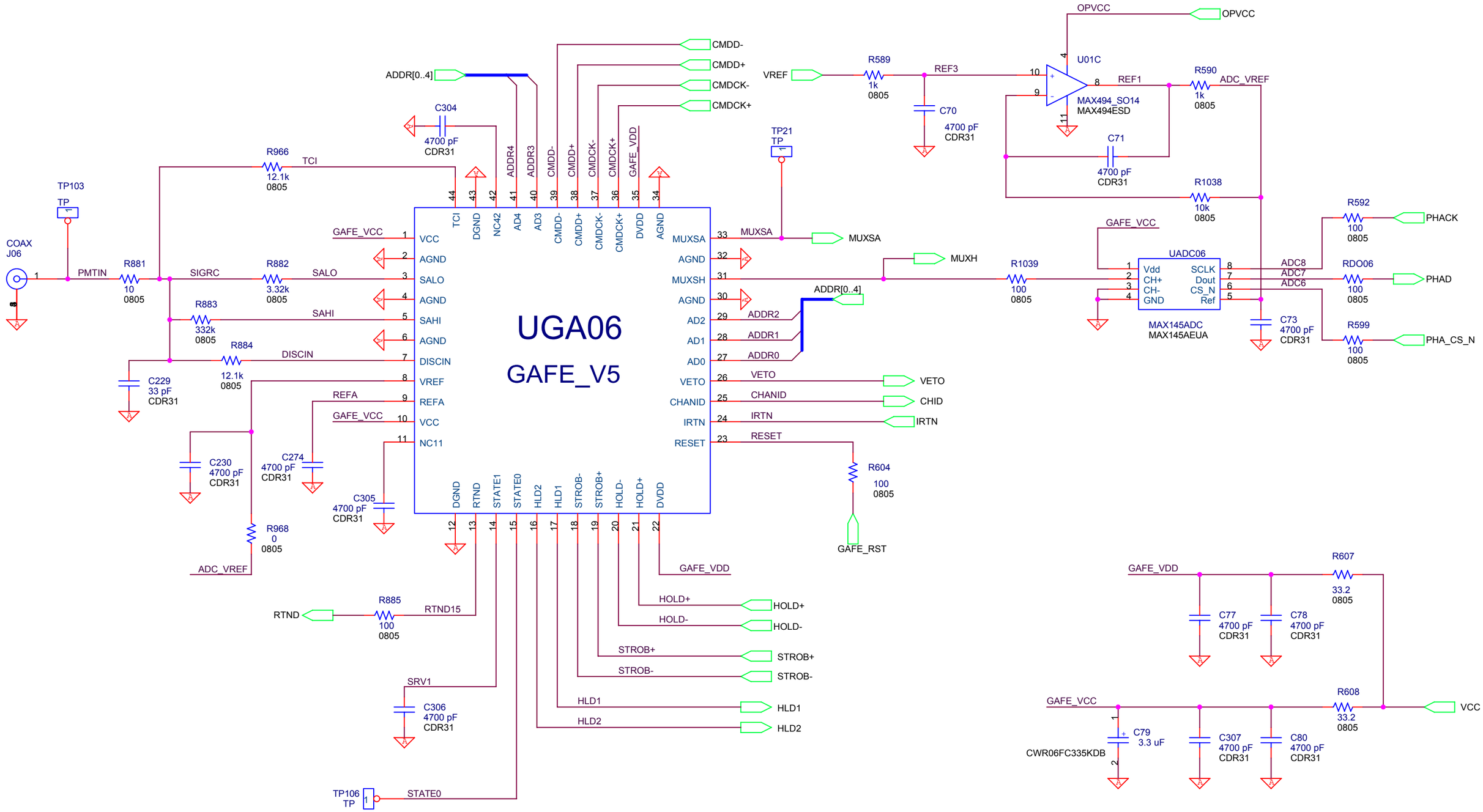

Dave Sheppard, x66539

Title: GLAST ACD GAFE ASIC AND ADC CIRCUIT

Size: B | Document Number: 2061840-12 to -29 | Rev: -

Date: Thursday, May 22, 2003 | Sheet 19 of 30

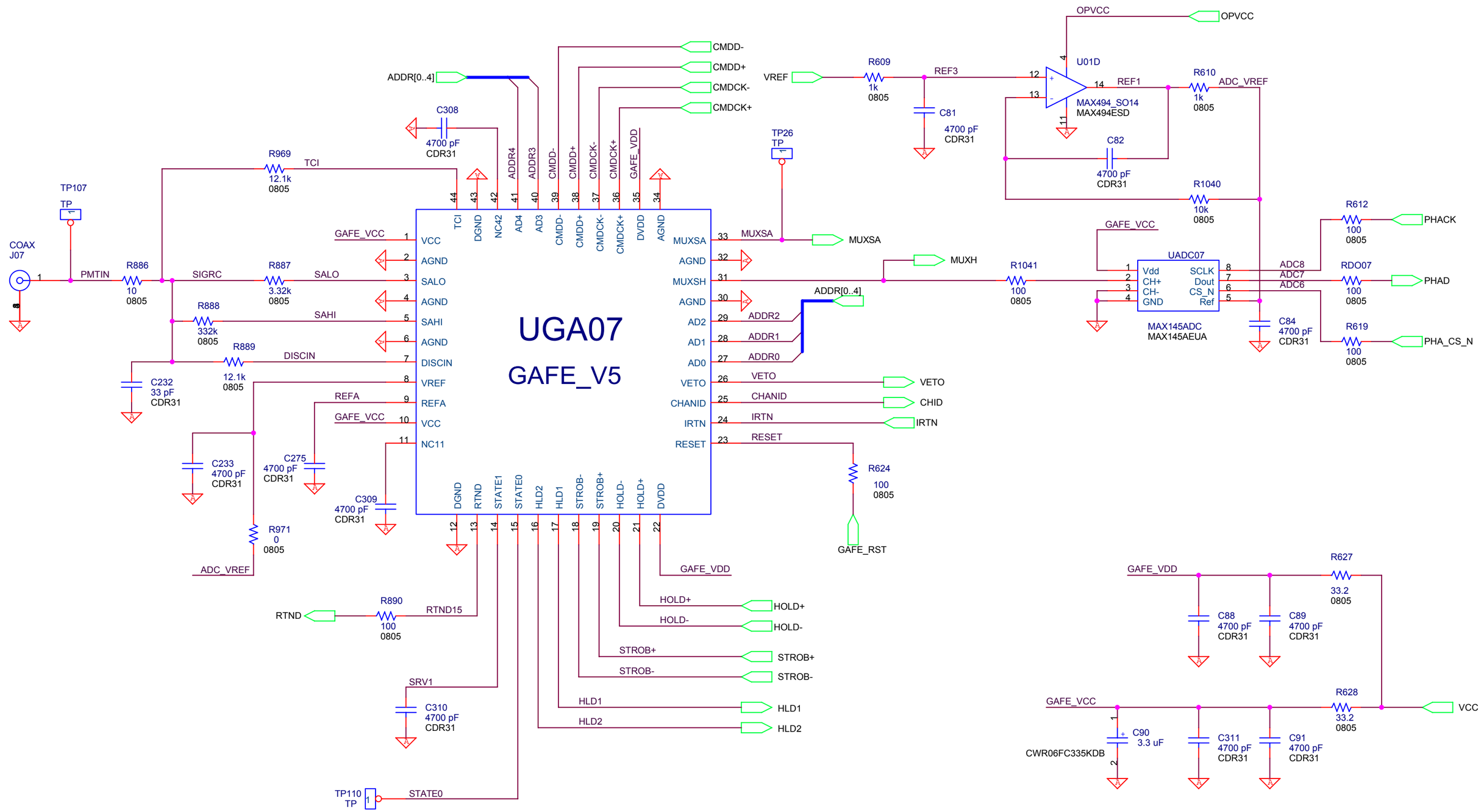

Dave Sheppard, x66539

Title: GLAST ACD GAFE ASIC AND ADC CIRCUIT

Size: B | Document Number: 2061840-12 to -29 | Rev: -

Date: Thursday, May 22, 2003 | Sheet 20 of 30

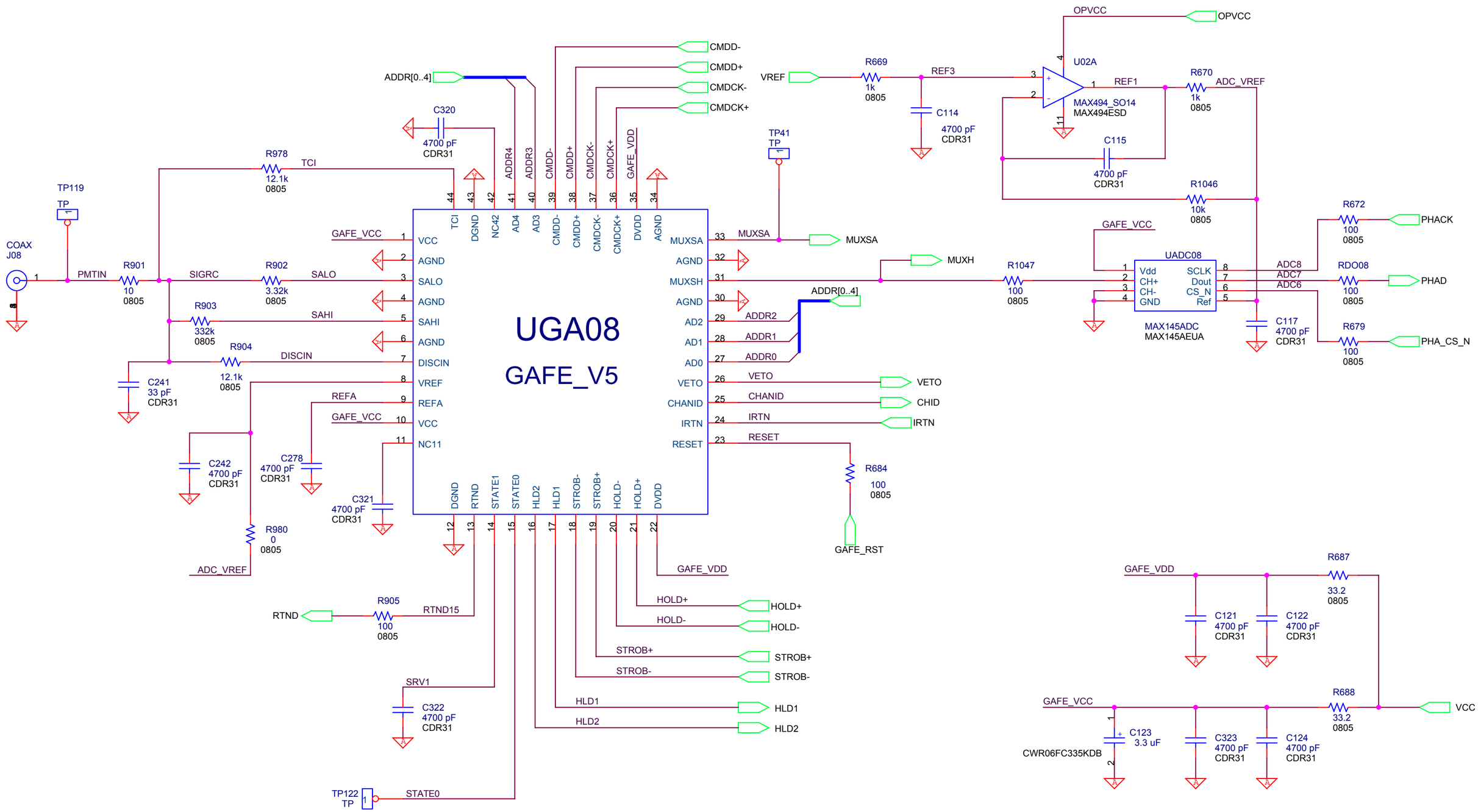

Dave Sheppard, x66539

Title: GLAST ACD GAFE ASIC AND ADC CIRCUIT

Size: B | Document Number: 2061840-12 to -29 | Rev: -

Date: Thursday, May 22, 2003 | Sheet 21 of 30

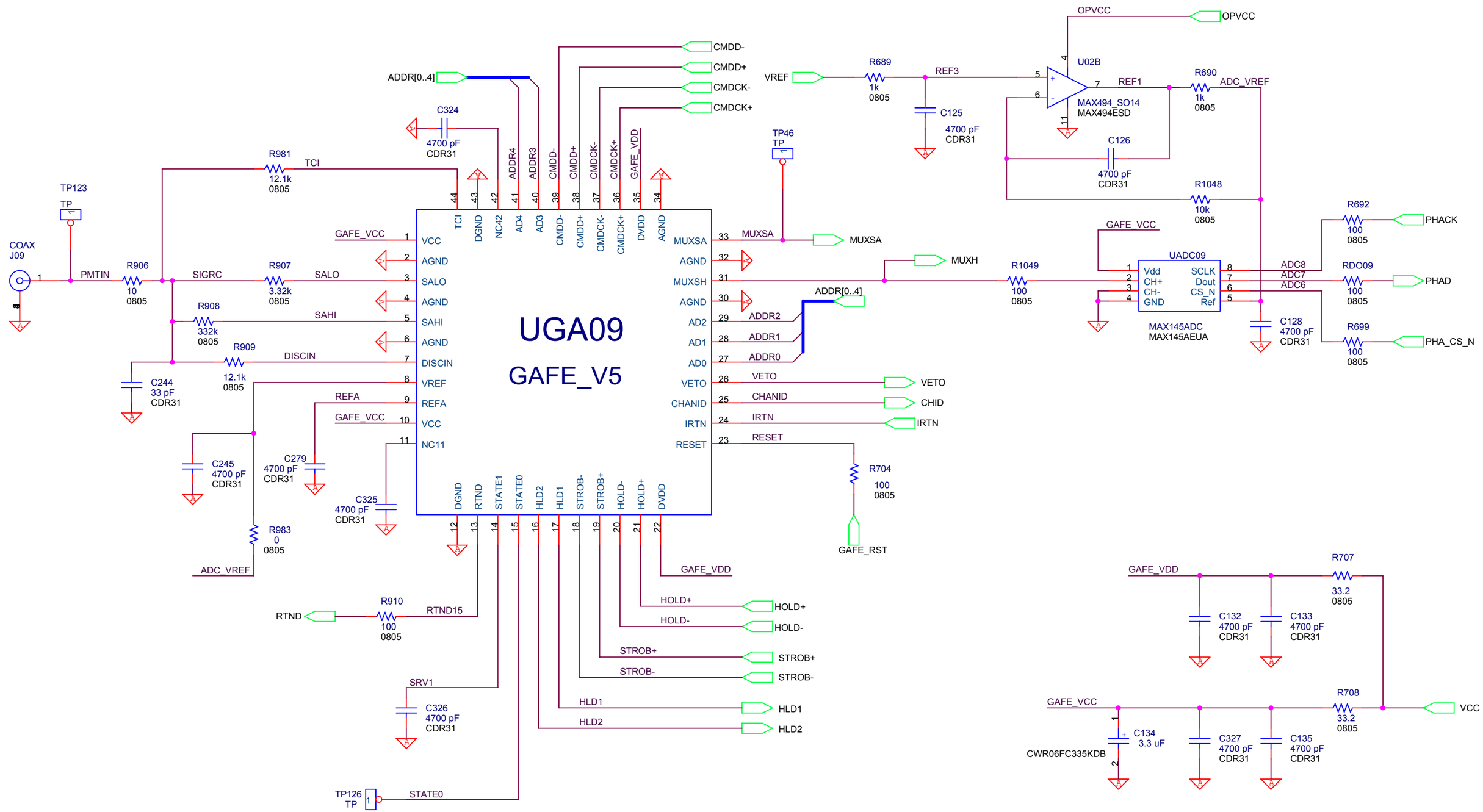

Dave Sheppard, x66539

Title: GLAST ACD GAFE ASIC AND ADC CIRCUIT

Size: B | Document Number: 2061840-12 to -29 | Rev: -

Date: Thursday, May 22, 2003 | Sheet 22 of 30

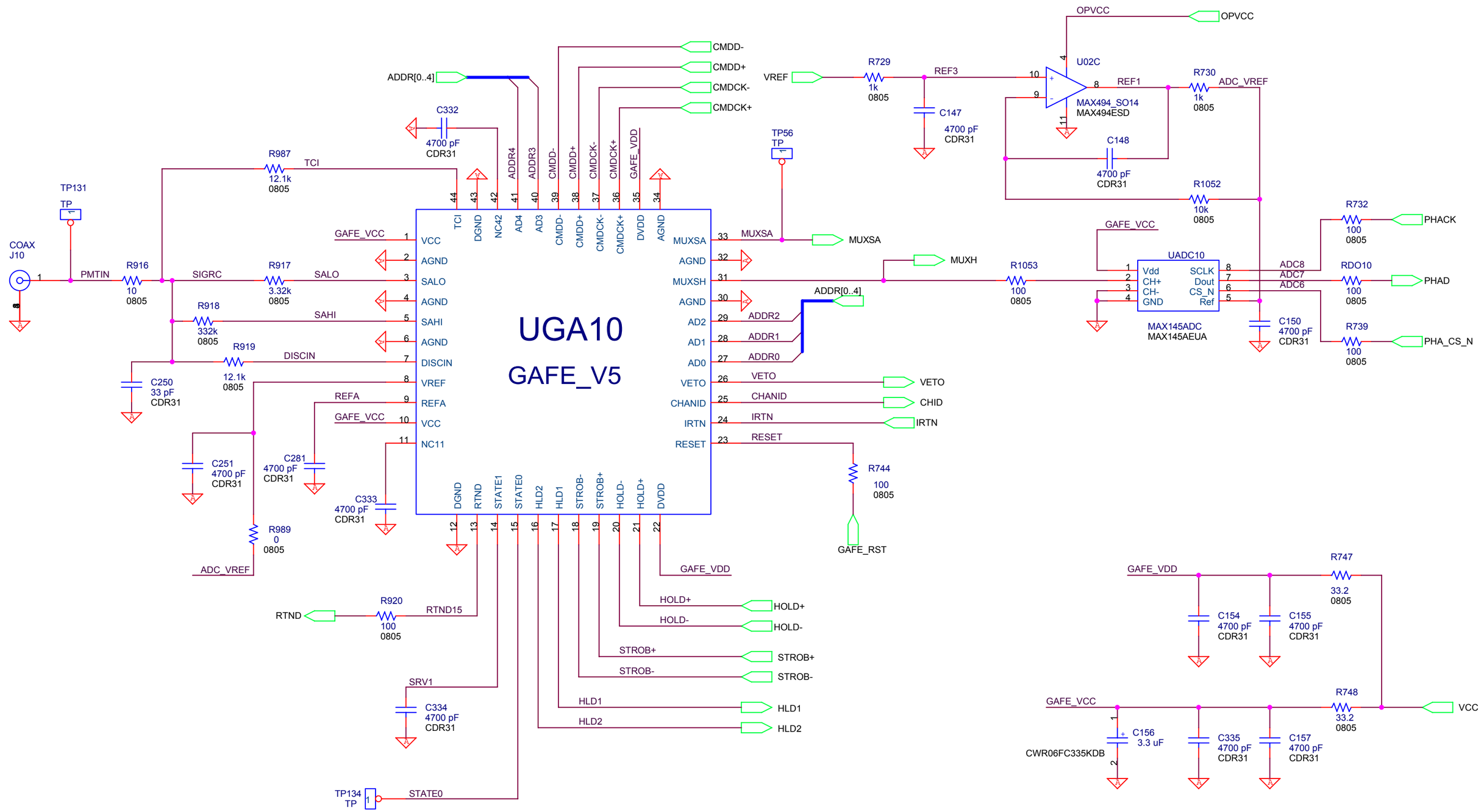

Dave Sheppard, x66539

Title: GLAST ACD GAFE ASIC AND ADC CIRCUIT

Size: B | Document Number: 2061840-12 to -29 | Rev: -

Date: Thursday, May 22, 2003 | Sheet 23 of 30

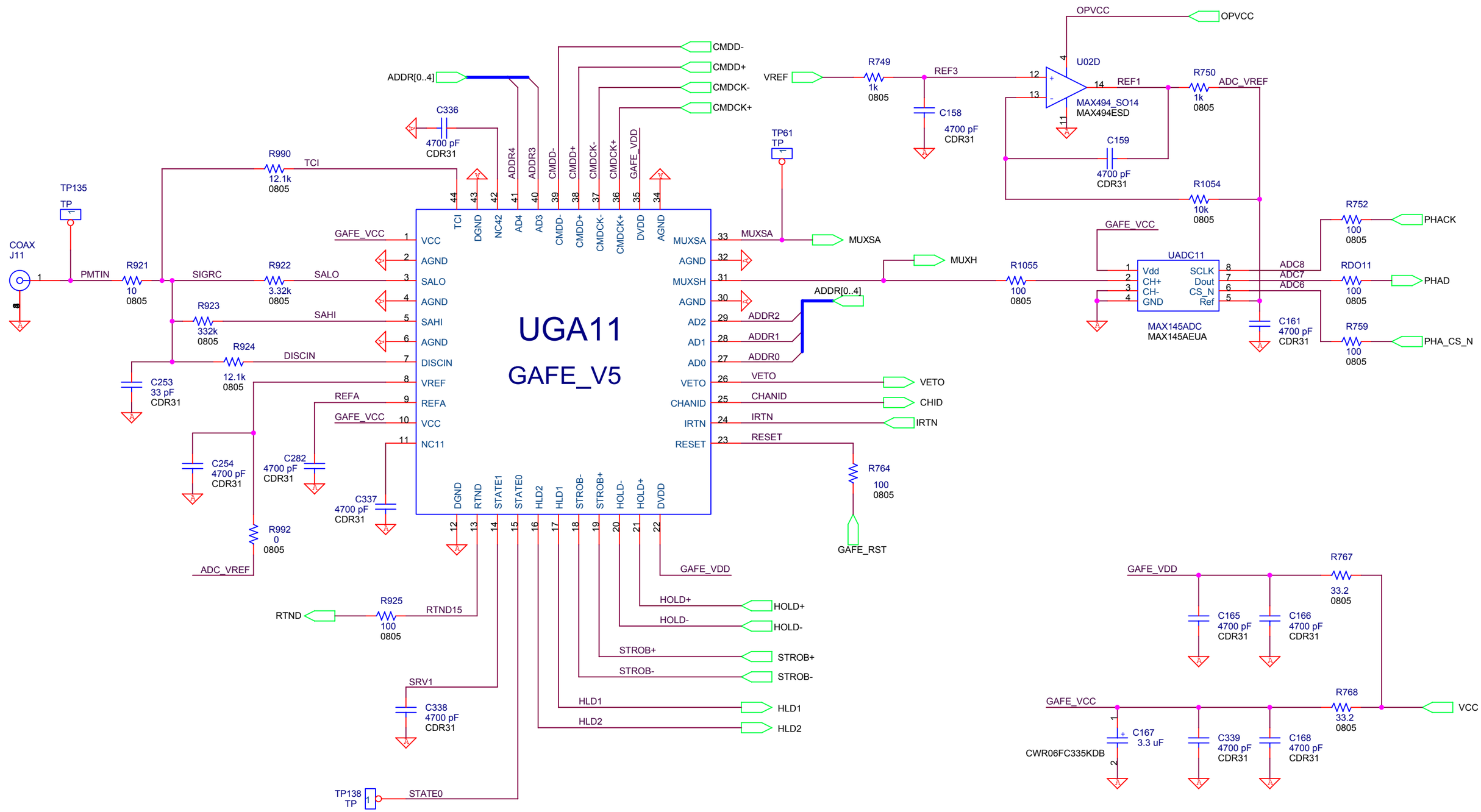

Dave Sheppard, x66539

Title: GLAST ACD GAFE ASIC AND ADC CIRCUIT

Size: B | Document Number: 2061840-12 to -29 | Rev: -

Date: Thursday, May 22, 2003 | Sheet 24 of 30

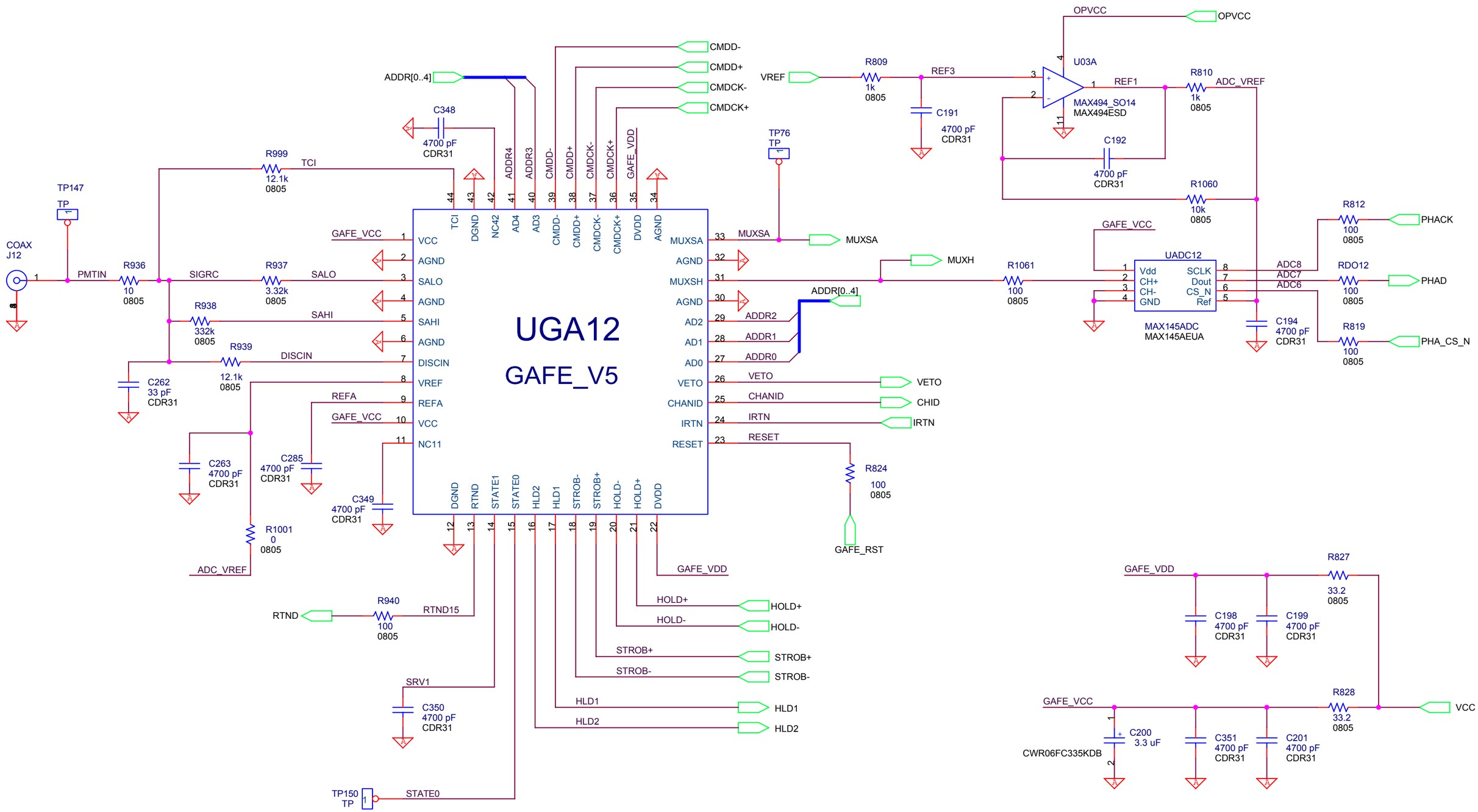

Dave Sheppard, x66539

Title: GLAST ACD GAFE ASIC AND ADC CIRCUIT

Size: B | Document Number: 2061840-12 to -29 | Rev: -

Date: Thursday, May 22, 2003 | Sheet 25 of 30

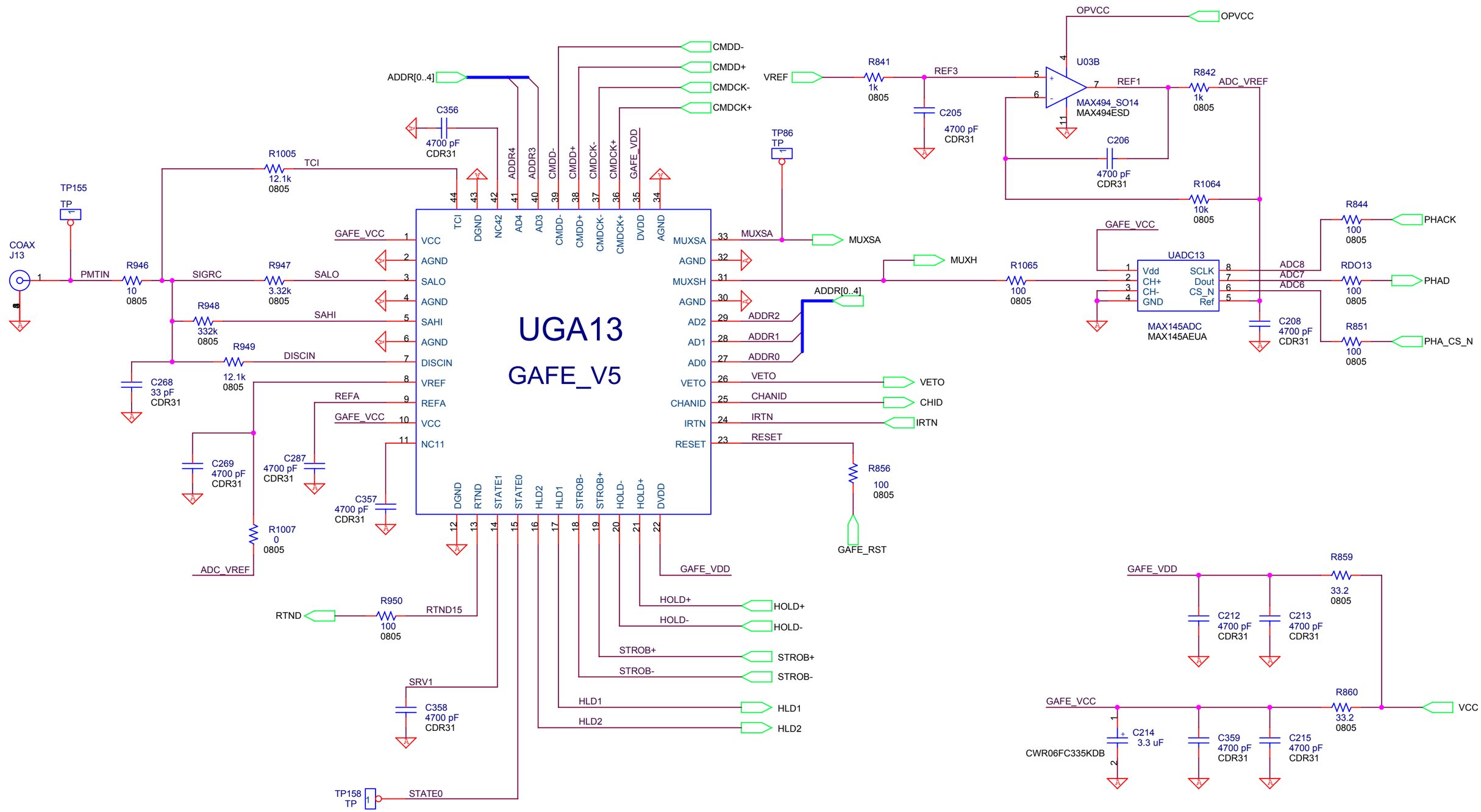

Dave Sheppard, x66539

Title: GLAST ACD GAFE ASIC AND ADC CIRCUIT

Size: B | Document Number: 2061840-12 to -29 | Rev: -

Date: Thursday, May 22, 2003 | Sheet 26 of 30

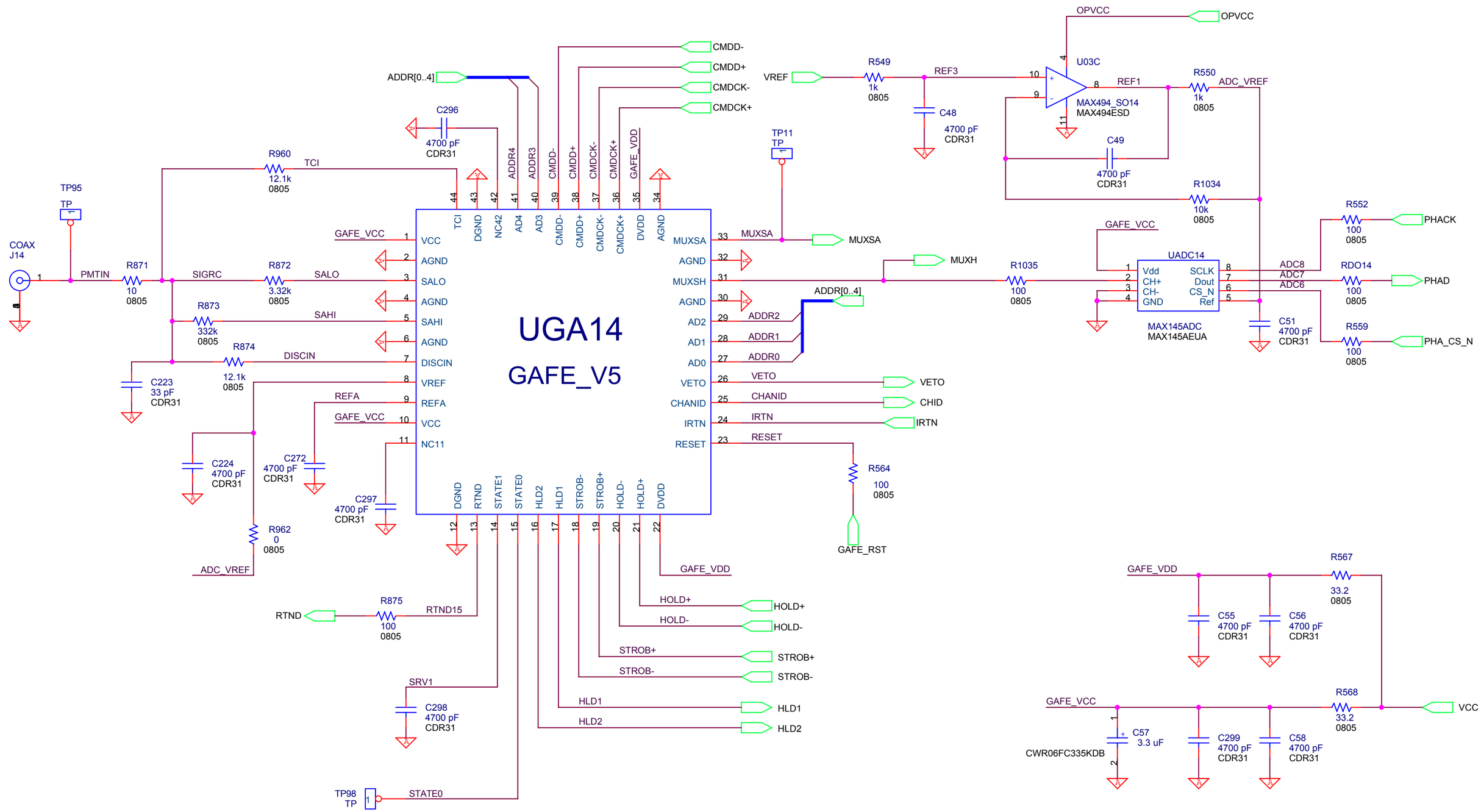

Dave Sheppard, x66539

Title: GLAST ACD GAFE ASIC AND ADC CIRCUIT

Size: B | Document Number: 2061840-12 to -29 | Rev: -

Date: Thursday, May 22, 2003 | Sheet 27 of 30

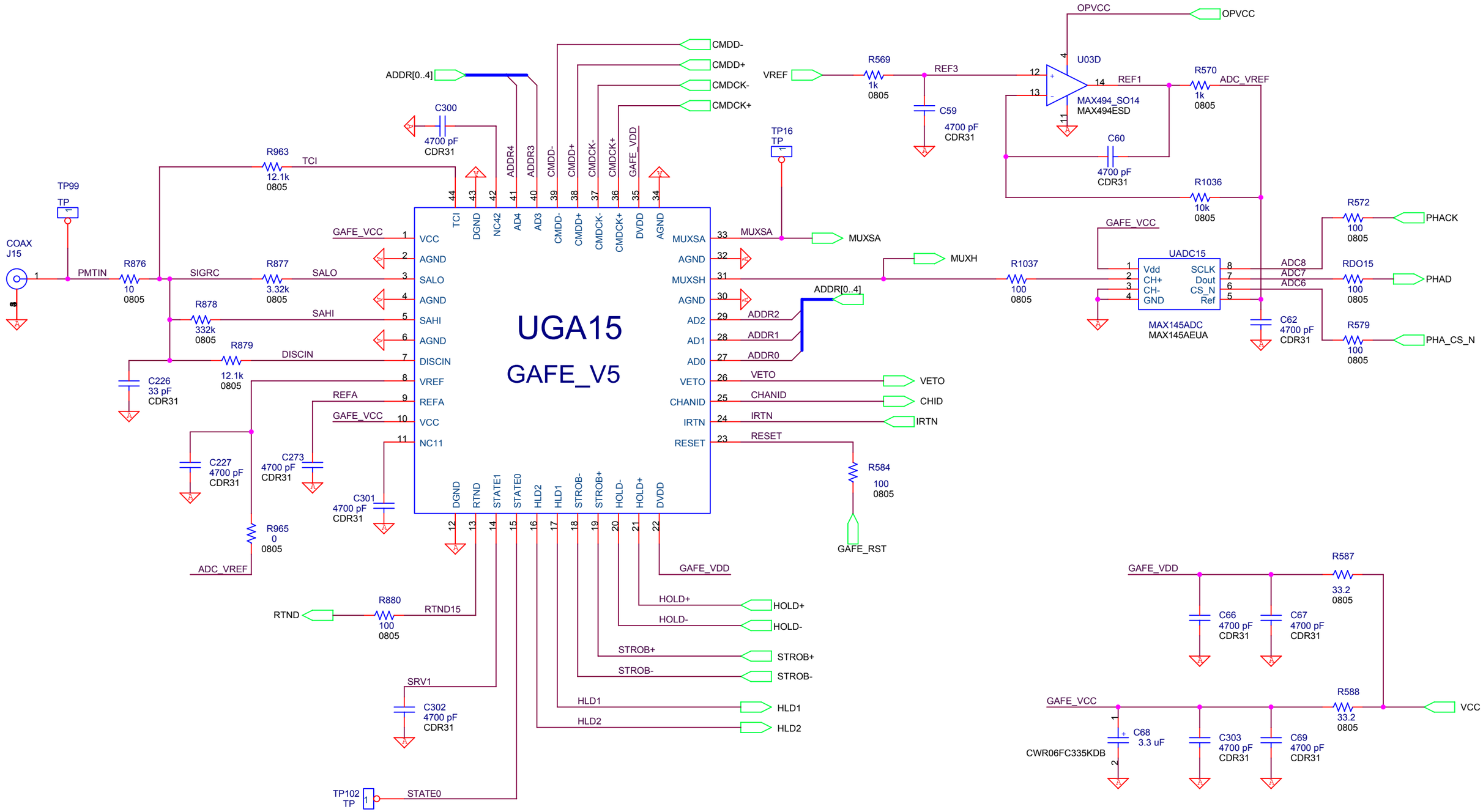

Dave Sheppard, x66539

Title: GLAST ACD GAFE ASIC AND ADC CIRCUIT

Size: B | Document Number: 2061840-12 to -29 | Rev: -

Date: Thursday, May 22, 2003 | Sheet 28 of 30

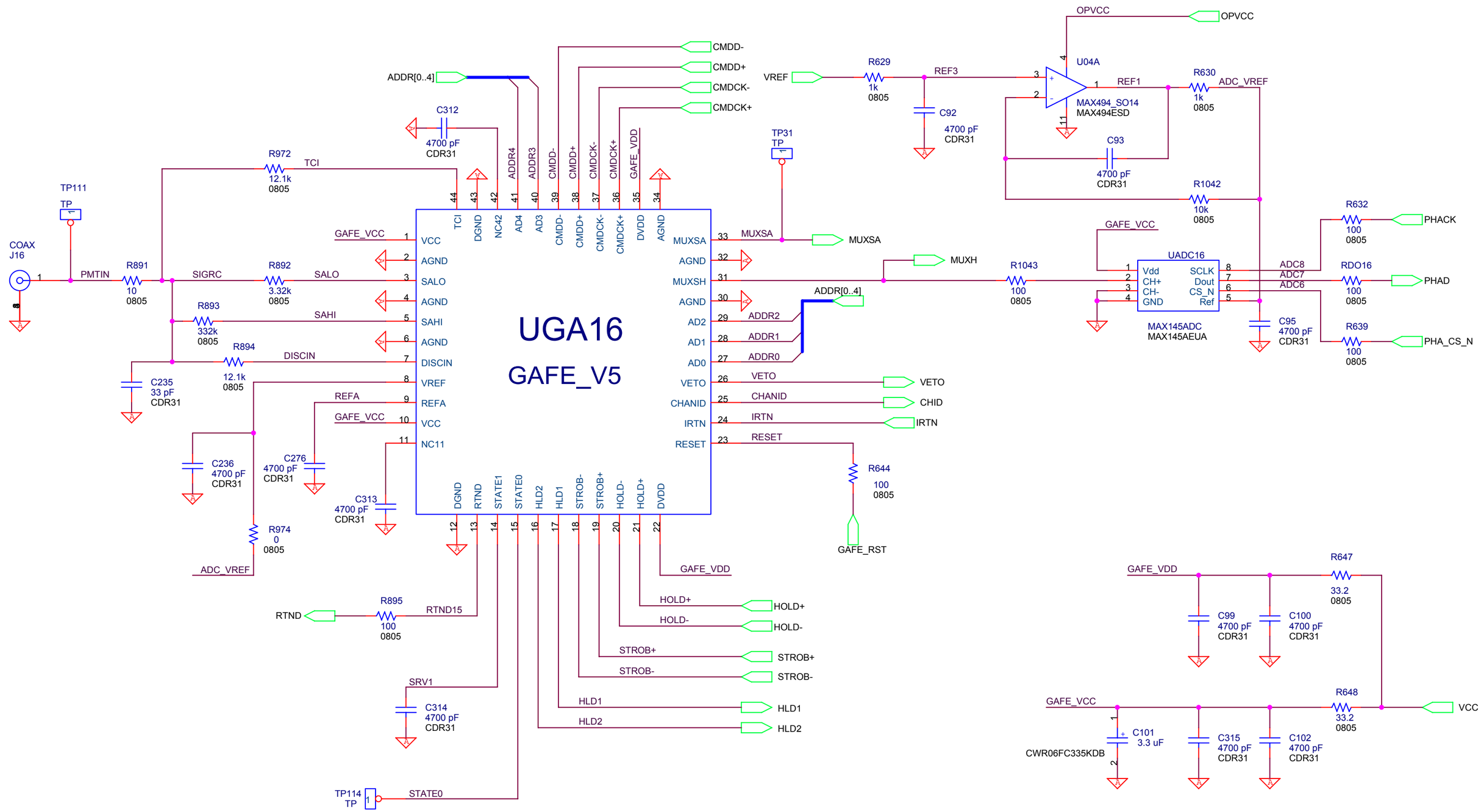

Dave Sheppard, x66539

Title: GLAST ACD GAFE ASIC AND ADC CIRCUIT

Size: B | Document Number: 2061840-12 to -29 | Rev: -

Date: Thursday, May 22, 2003 | Sheet 29 of 30

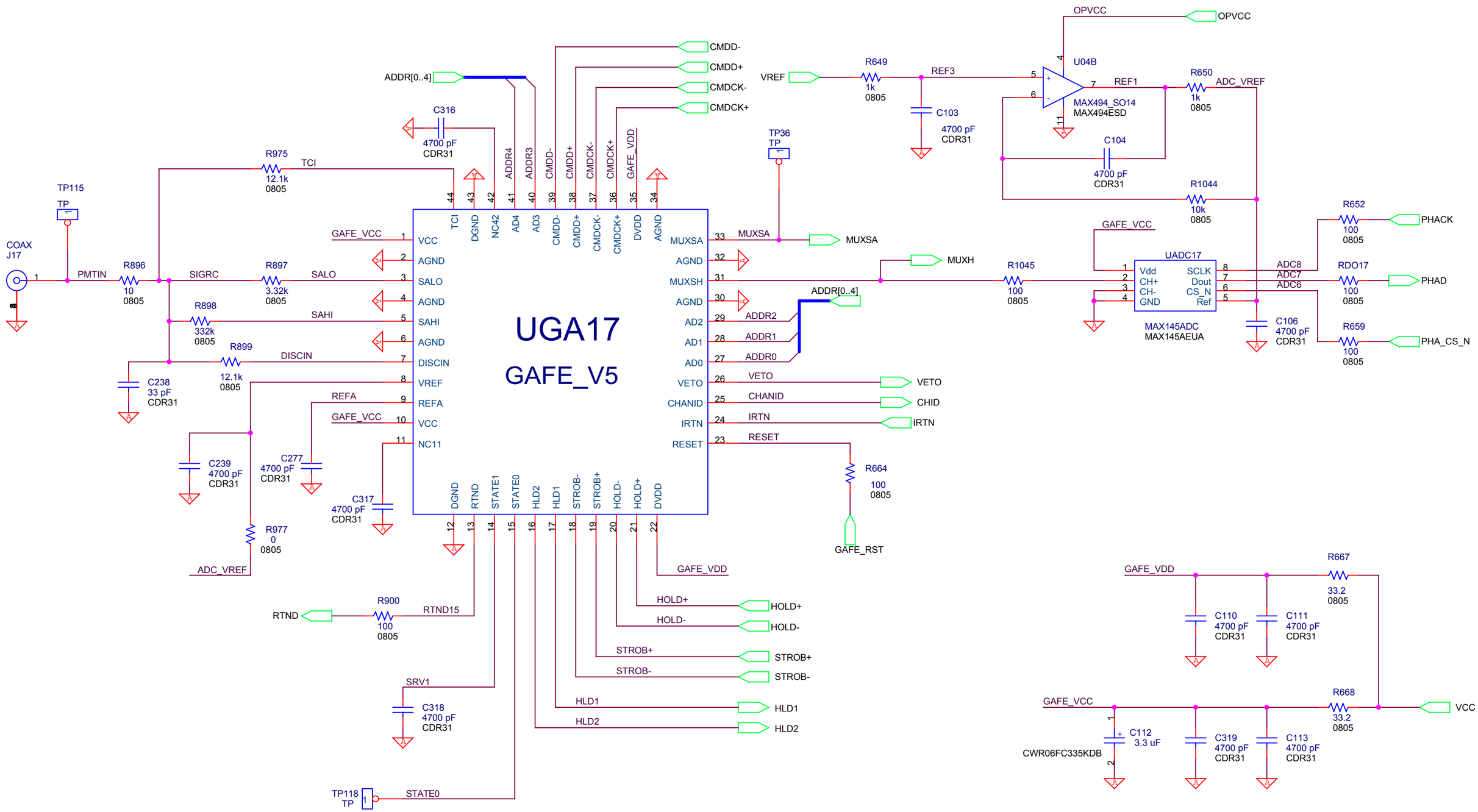

Dave Sheppard, x66539

Title: GLAST ACD GAFE ASIC AND ADC CIRCUIT

Size: B | Document Number: 2061840-12 to -29 | Rev: -

Date: Thursday, May 22, 2003 | Sheet 30 of 30

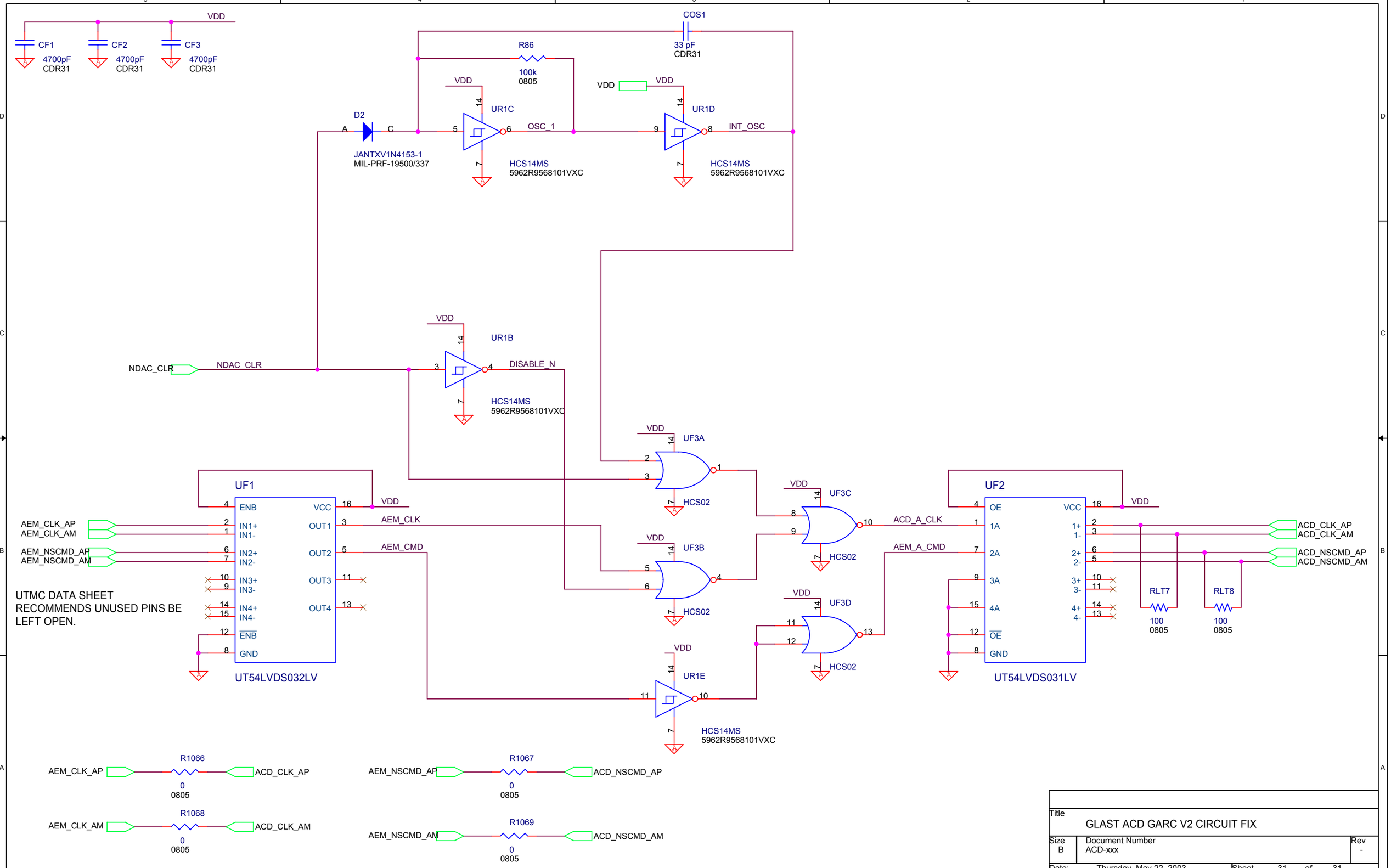

Title	GLAST ACD GARC V2 CIRCUIT FIX
Size B	Document Number ACD-xxx
Rev	-
Date:	Thursday, May 22, 2003
Sheet	31 of 31