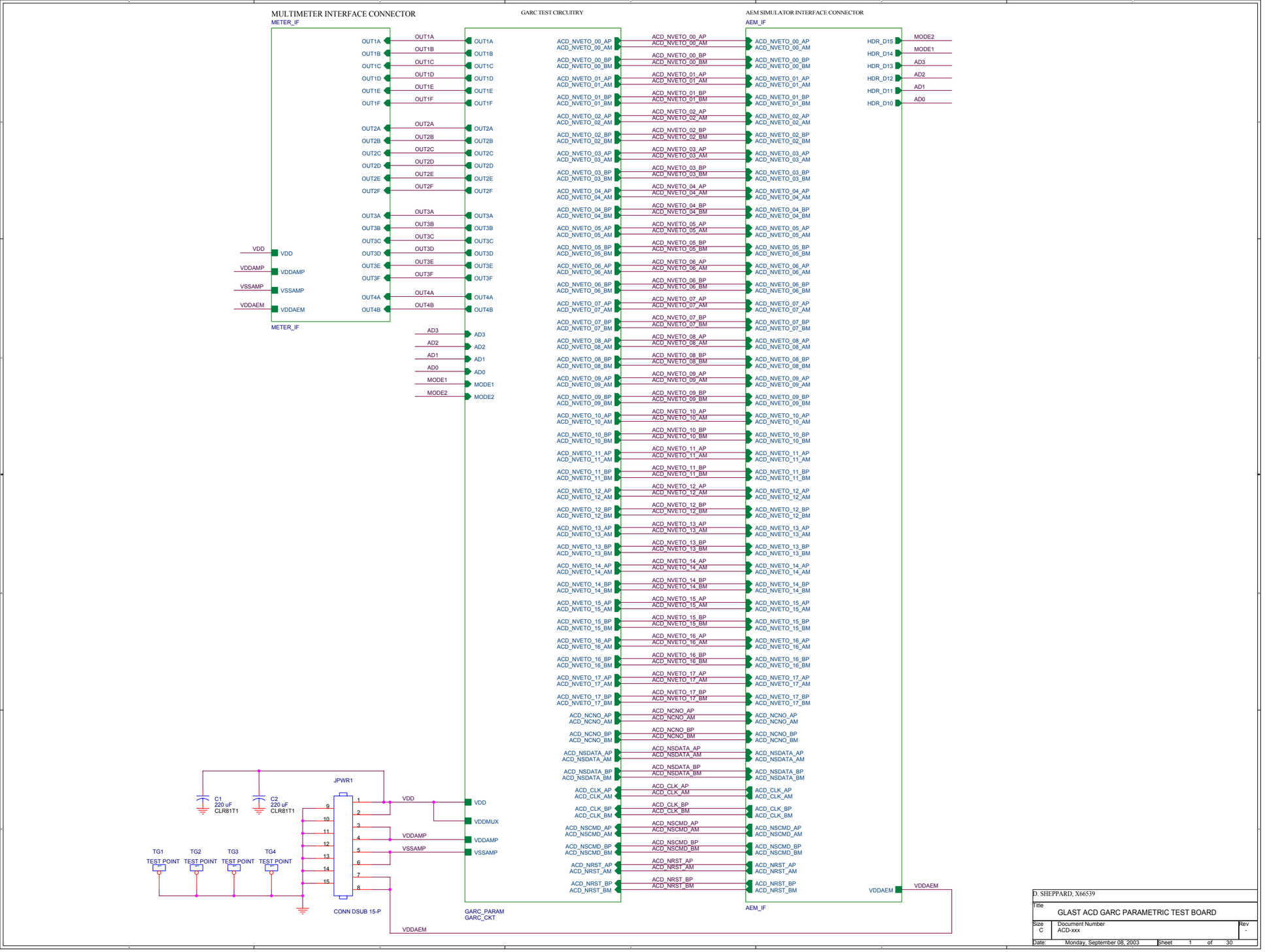

GARC PARAMETRIC TEST BOARD SCHEMATIC PLOTS 9-8-03

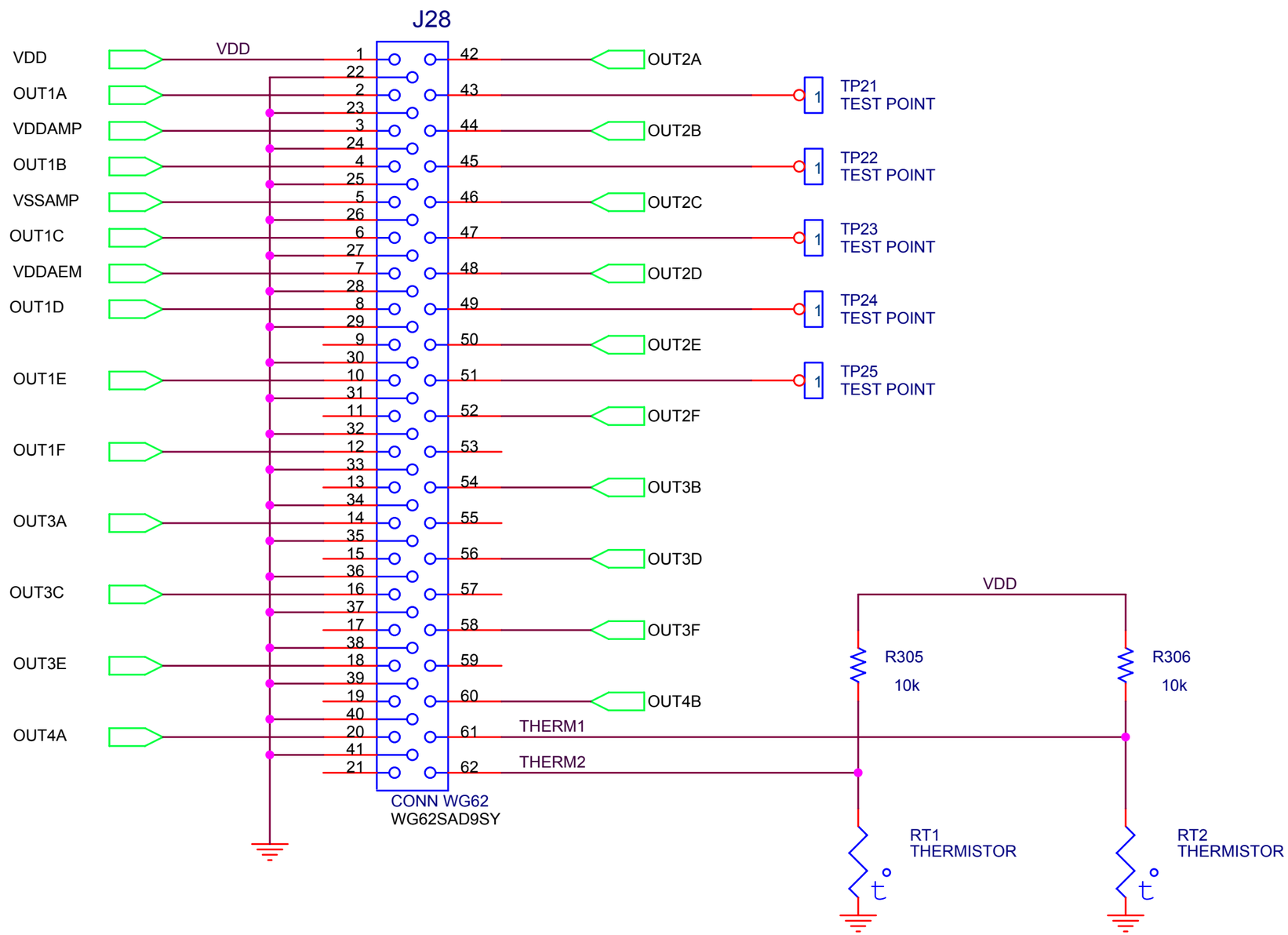

Title	GLAST ACD	
Size A	Document Number ACD-xxx	Rev -
Date: Monday, September 08, 2003	Sheet 29 of 30	

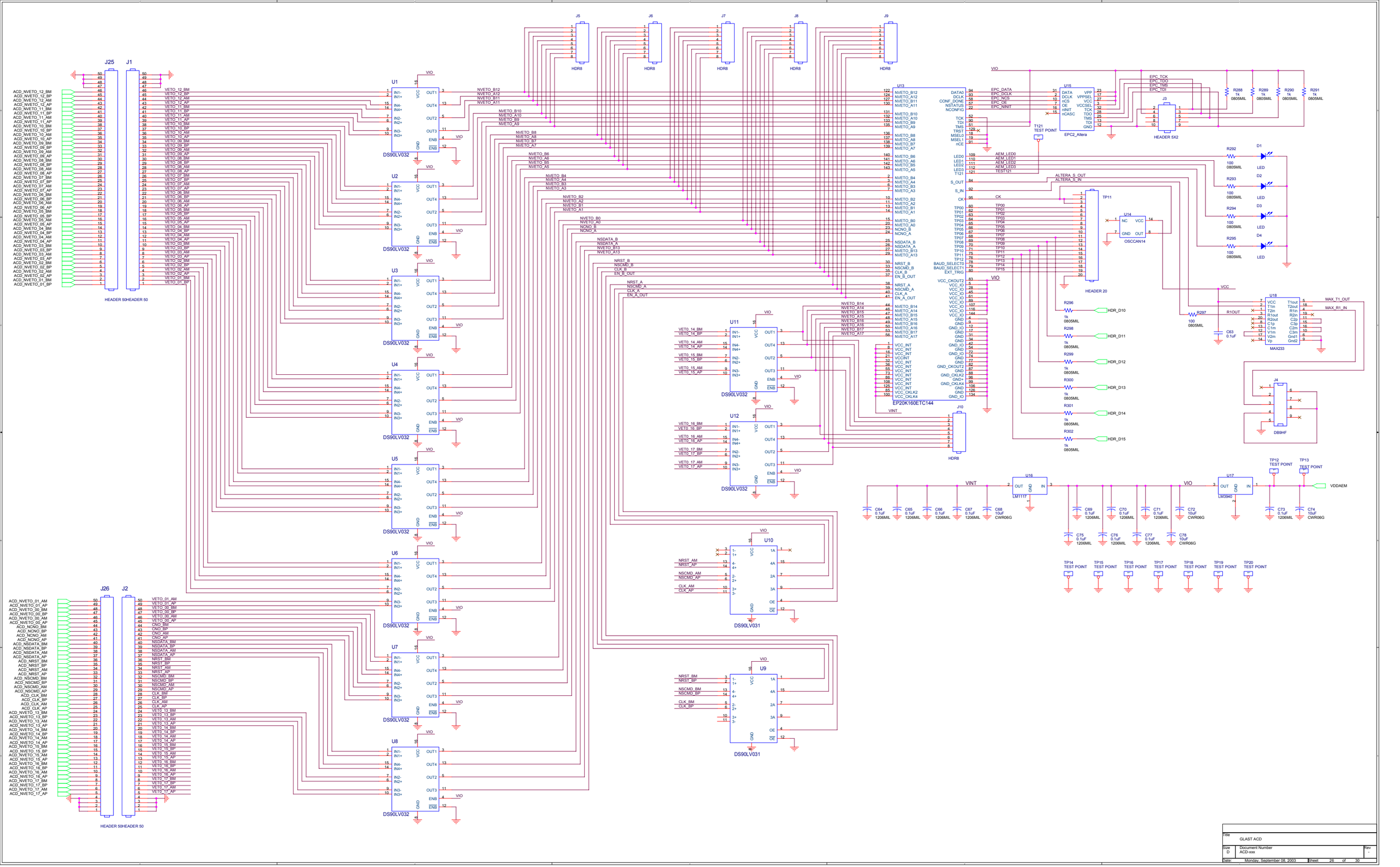

Title	GLAST ACD	
Size D	Document Number ACD-xxx	Rev -
Date: Monday, September 08, 2003	Sheet 26 of 30	

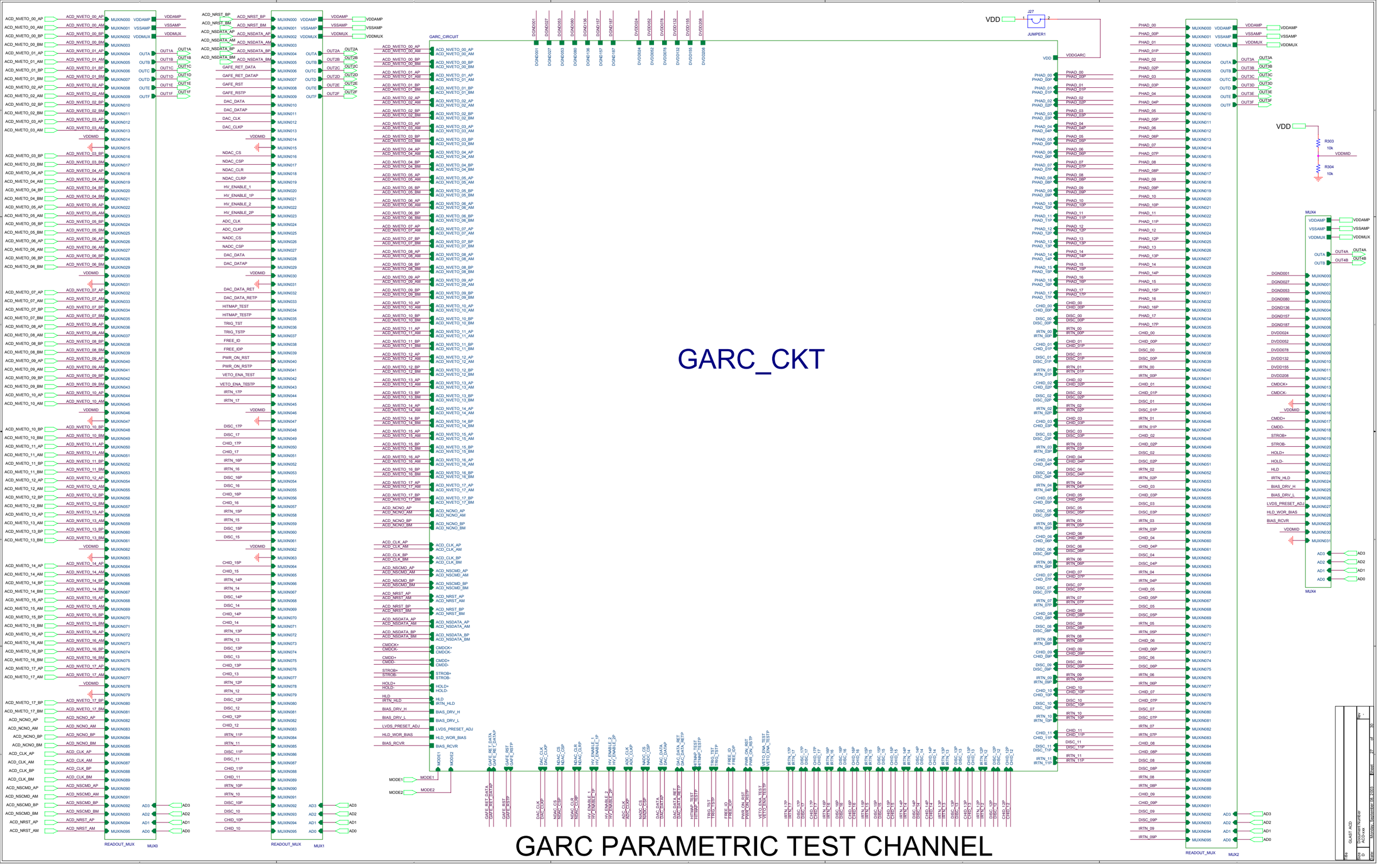
GARC_CKT
GARC PARAMETRIC TEST CHANNEL
GARC_CIRCUIT
READOUT_MUX
MUX0
MUX1
MUX2
MUX4
JUMPER1
VDD
R303
10k
R304
10k
VDDMID
GLAST ACD
Document Number
ACD-xxx
Monday, September 08, 2003
Sheet 27 of 30

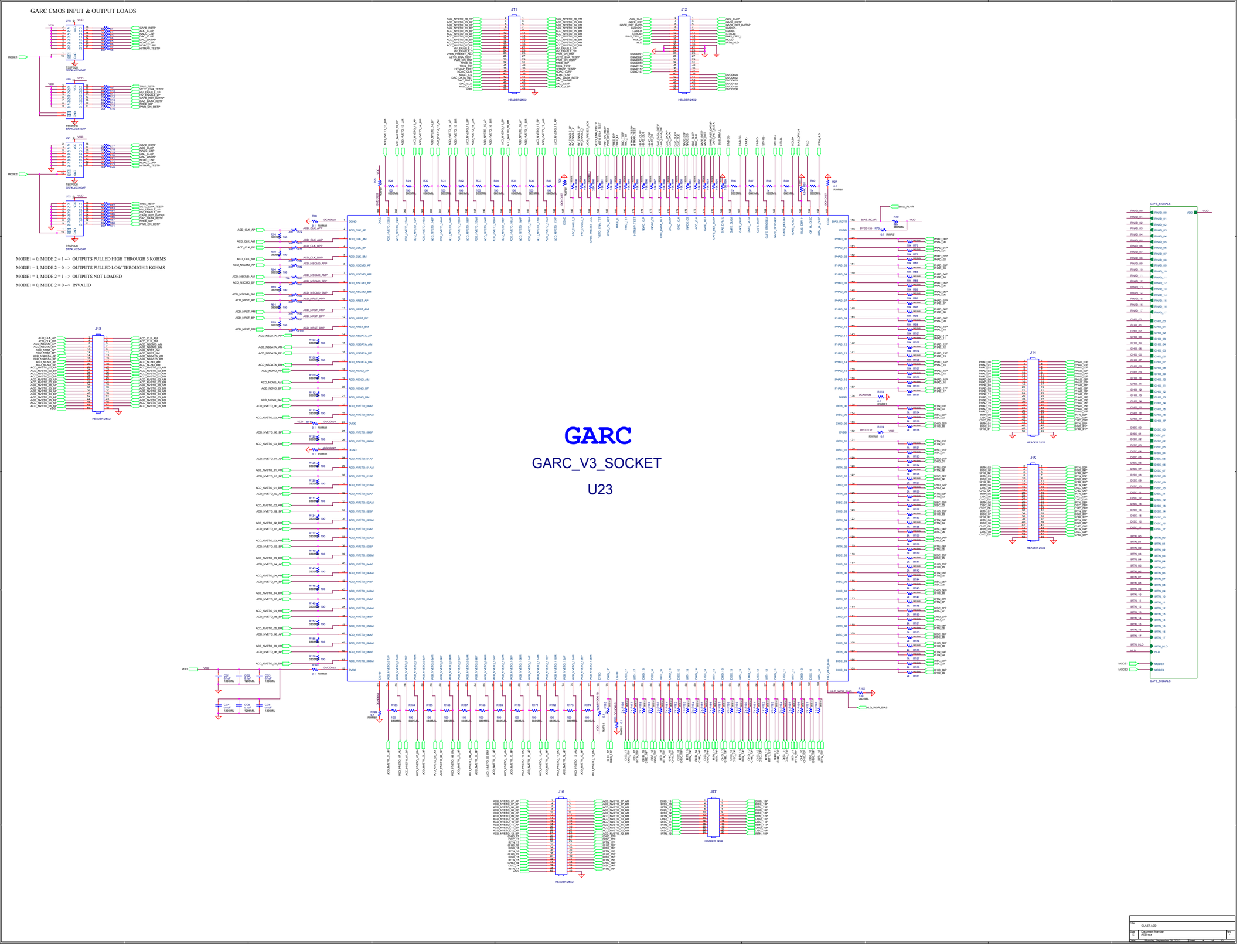
GARC CMOS INPUT & OUTPUT LOADS
MODE1 = 0, MODE 2 = 1 --> OUTPUTS PULLED HIGH THROUGH 3 KOHMS
MODE1 = 1, MODE 2 = 0 --> OUTPUTS PULLED LOW THROUGH 3 KOHMS
MODE1 = 1, MODE 2 = 1 --> OUTPUTS NOT LOADED
MODE1 = 0, MODE 2 = 0 --> INVALID
GARC
GARC_V3_SOCKET
U23
J11
J12
J13
J14
J15
J16
J17
GAFE_SIGNALS
GLAST ACD
Document Number
ACD-xxx
Monday, September 08, 2003
Sheet 4 of 8

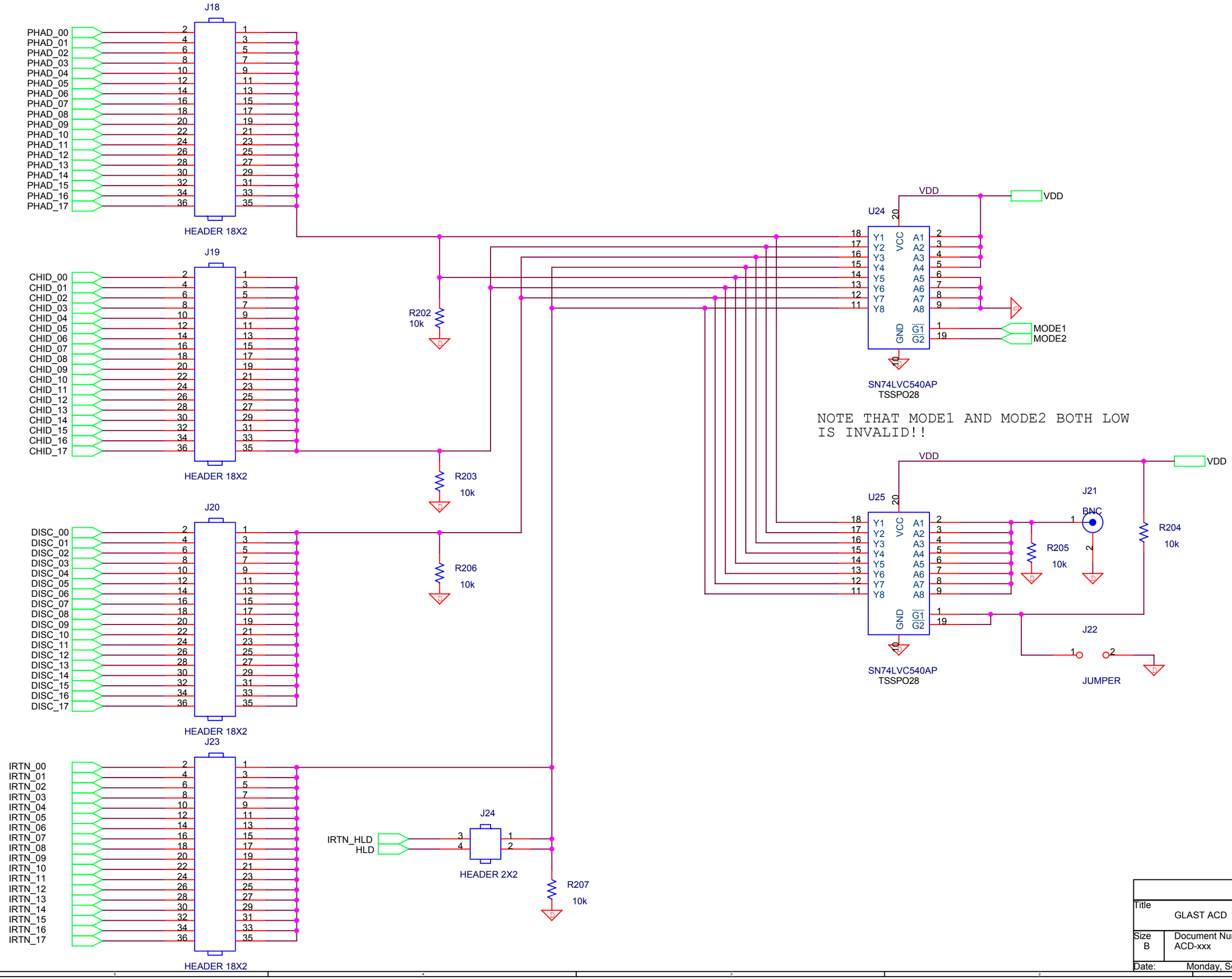

Title	GLAST ACD	
Size B	Document Number ACD-xxx	Rev -
Date: Monday, September 08, 2003	Sheet 5 of 30	

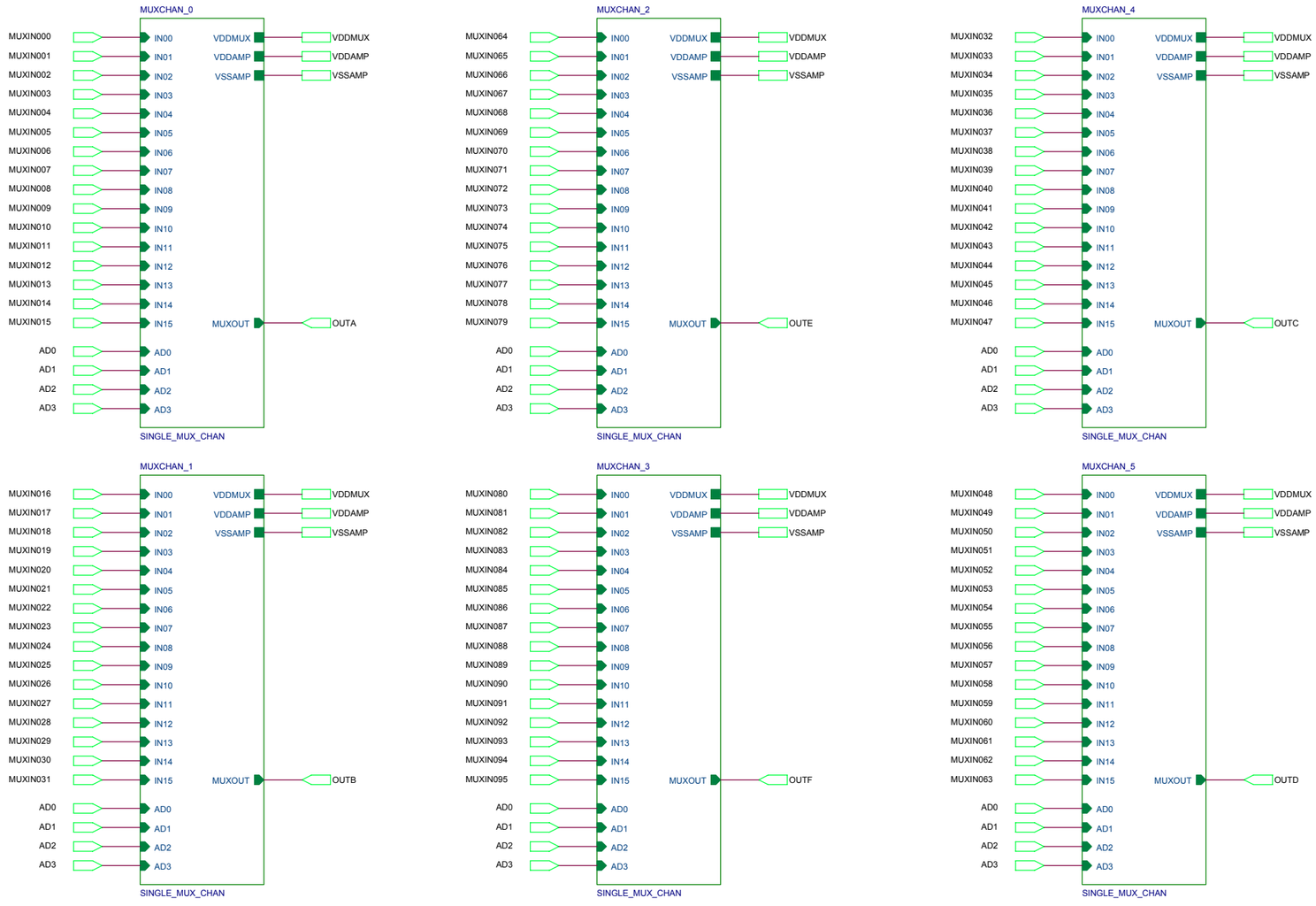

Title	GLAST ACD	
Size C	Document Number ACD-xxx	Rev -
Date: Monday, September 08, 2003	Sheet 2 of 30	

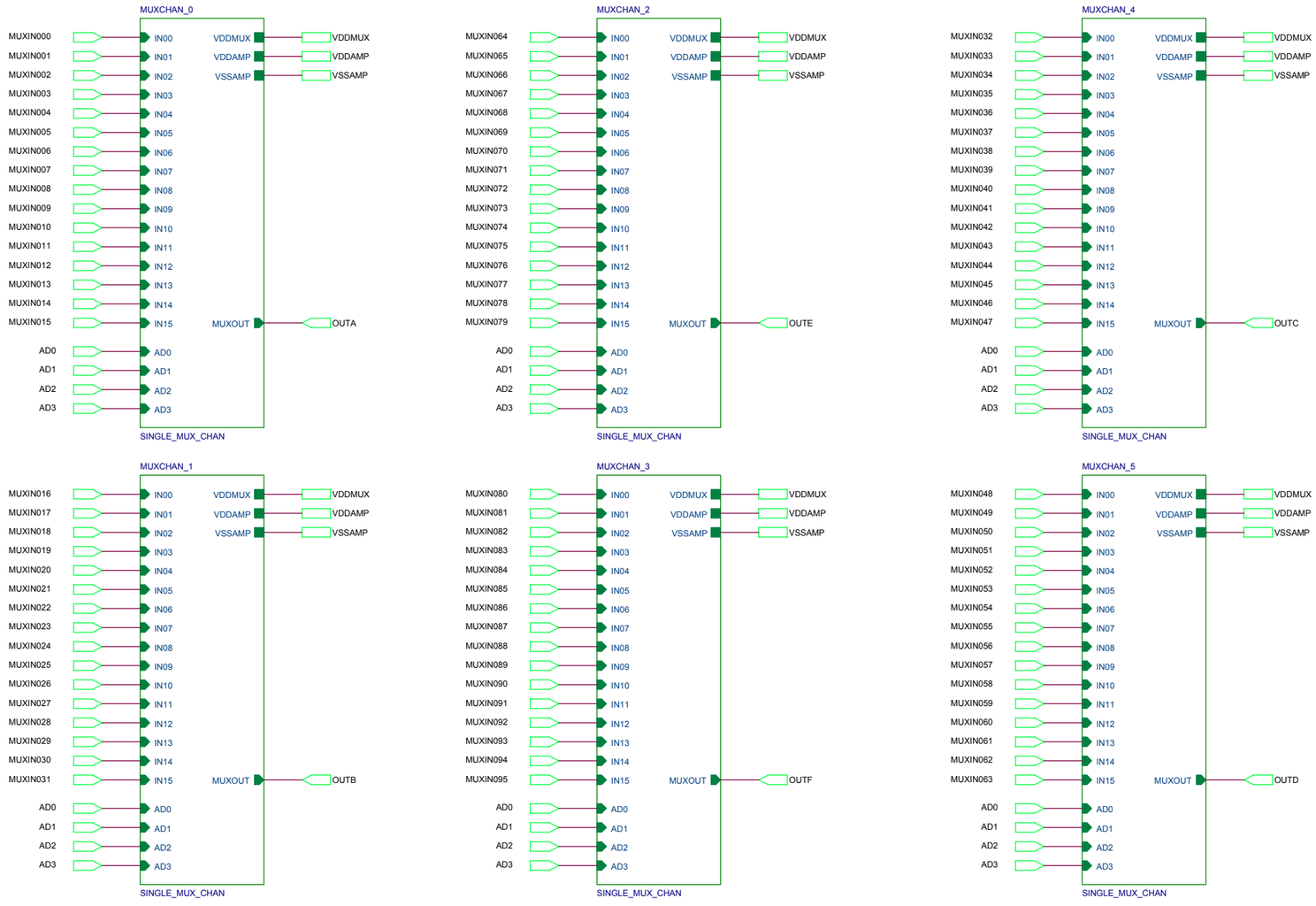

Title	GLAST ACD	
Size C	Document Number ACD-xxx	Rev -
Date: Monday, September 08, 2003	Sheet 28 of 30	

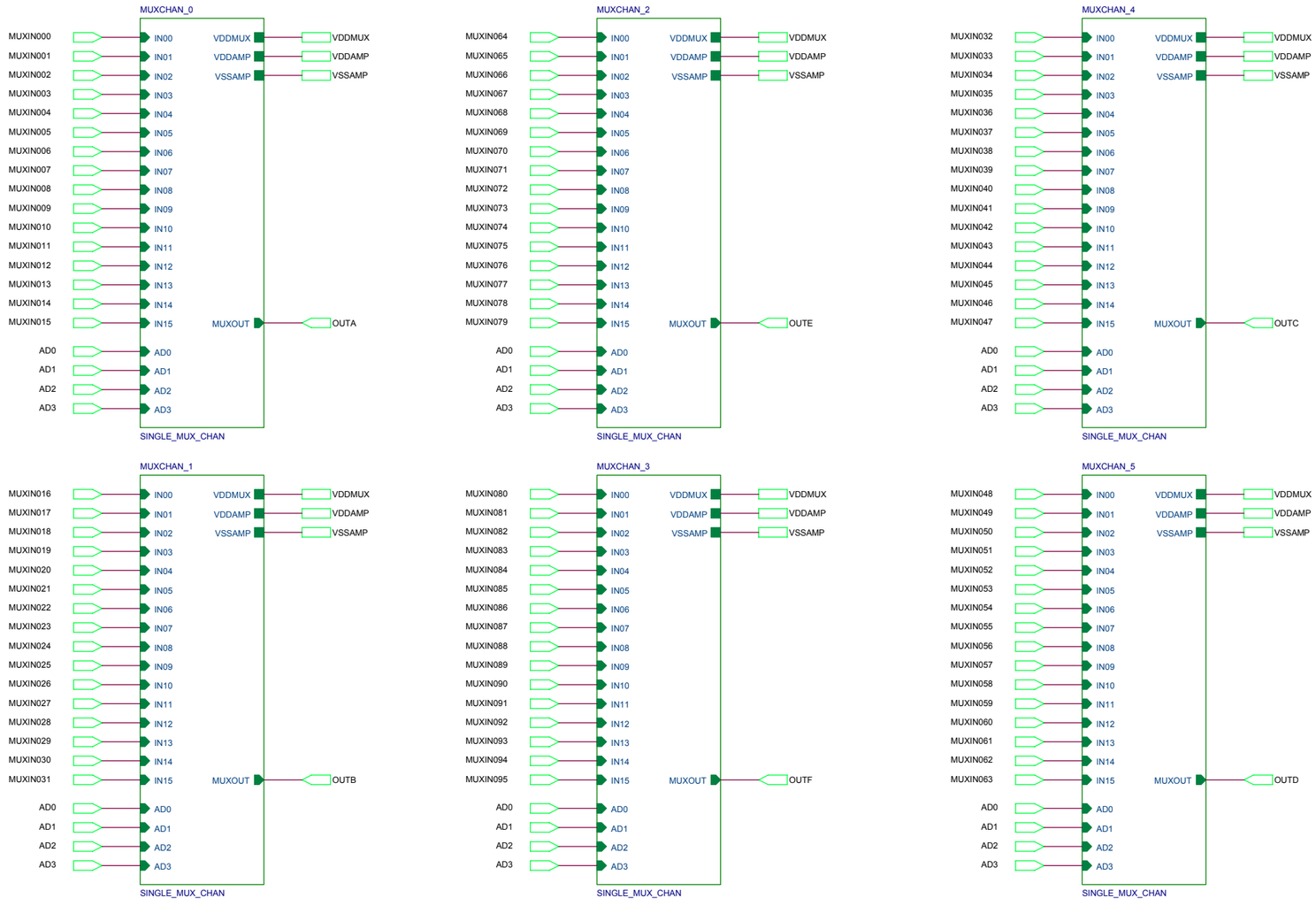

Title	GLAST ACD	
Size C	Document Number ACD-xxx	Rev -
Date: Monday, September 08, 2003	Sheet 30 of 30	

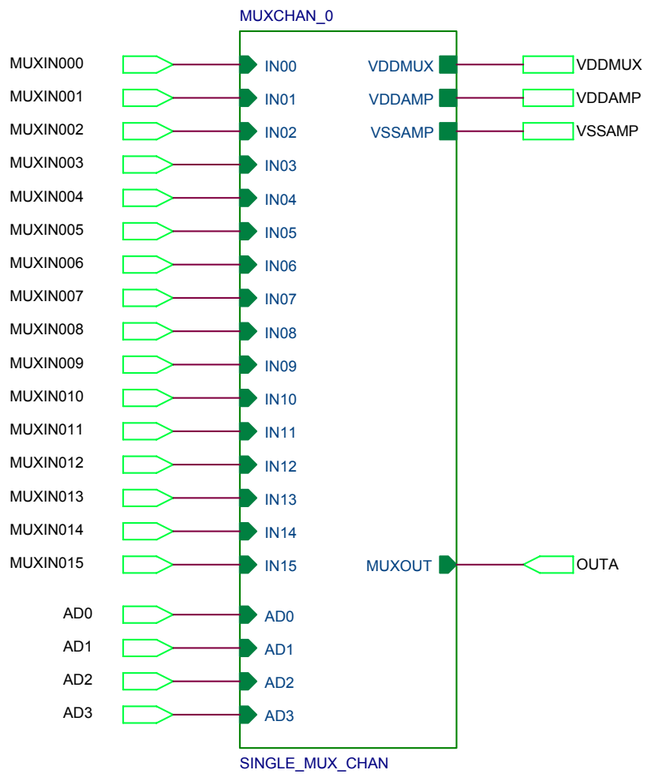

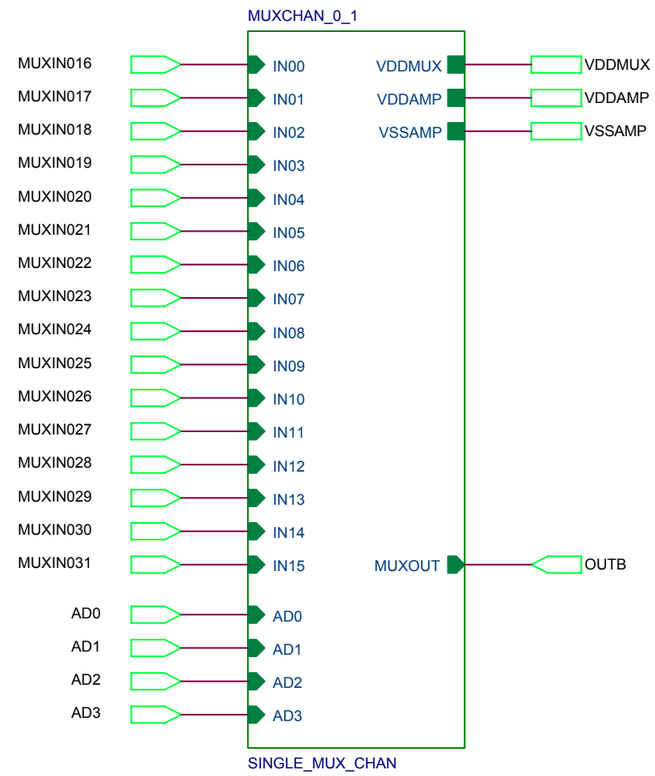

Title	GLAST ACD	
Size B	Document Number ACD-xxx	Rev -
Date: Monday, September 08, 2003	Sheet 3 of 30	

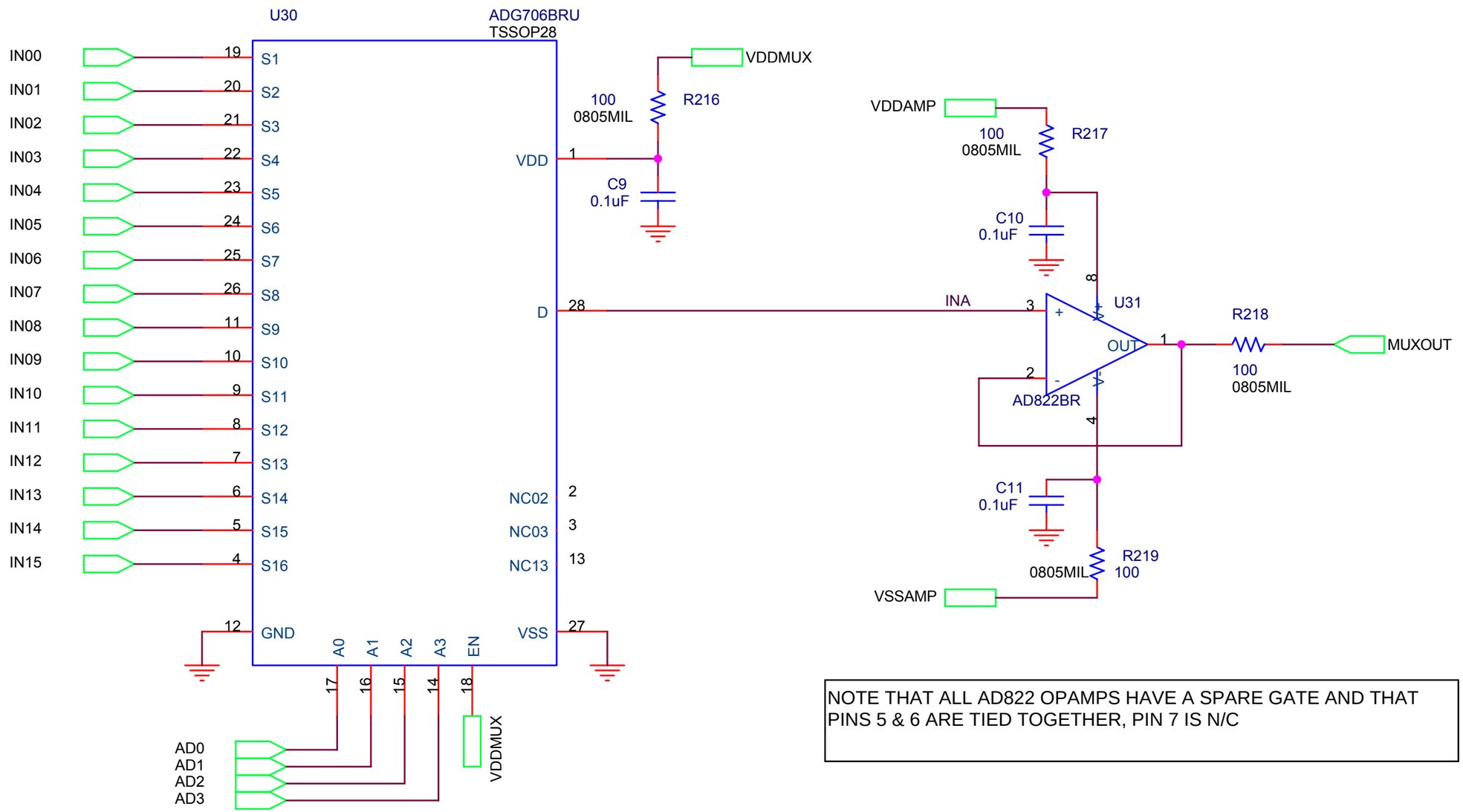

NOTE THAT ALL AD822 OPAMPS HAVE A SPARE GATE AND THAT PINS 5 & 6 ARE TIED TOGETHER, PIN 7 IS N/C

Title	GLAST ACD PARAMETRIC TEST BOARD MUX	
Size A	Document Number ACD-xxx	Rev -
Date: Monday, September 08, 2003	Sheet 8 of 30	

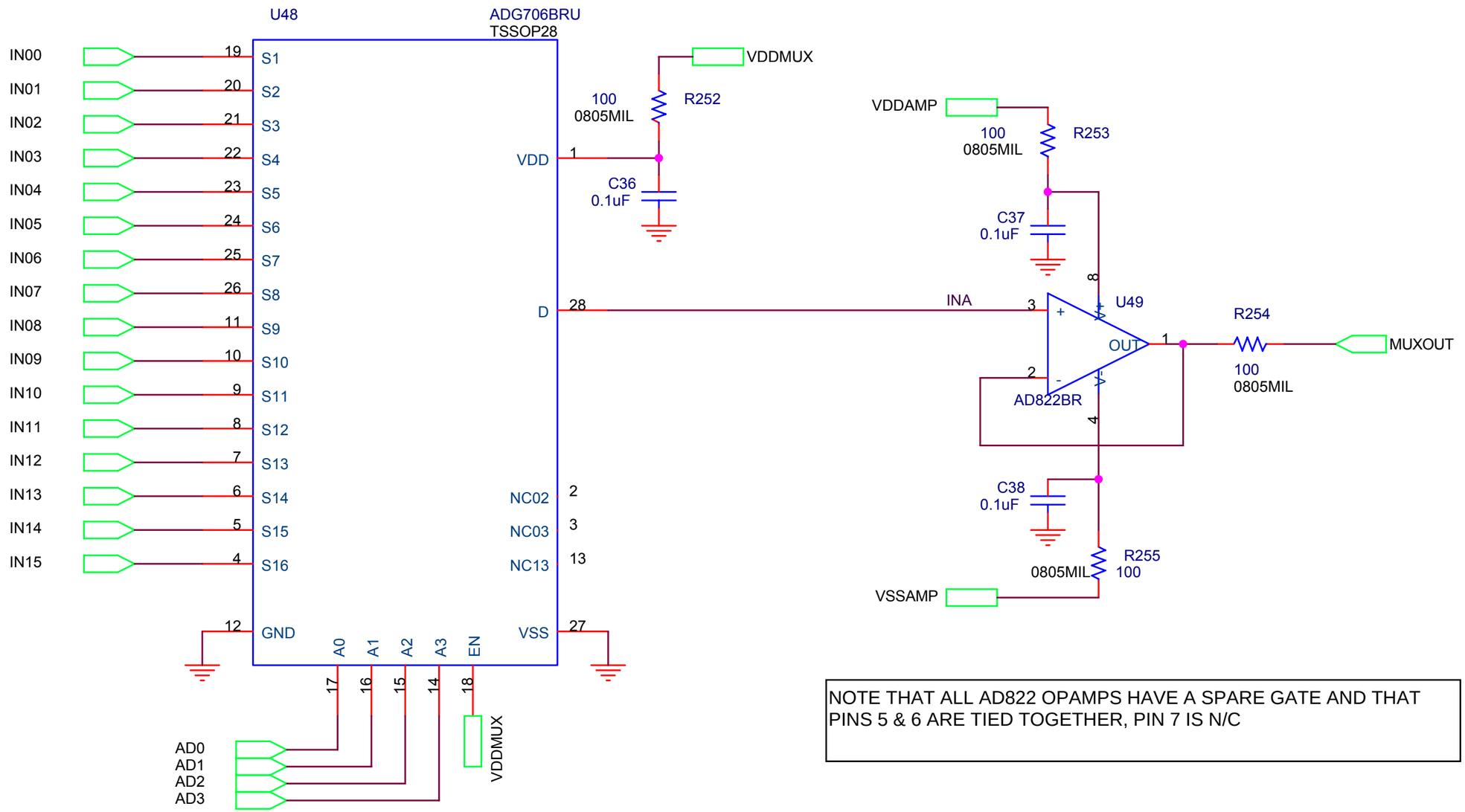

NOTE THAT ALL AD822 OPAMPS HAVE A SPARE GATE AND THAT PINS 5 & 6 ARE TIED TOGETHER, PIN 7 IS N/C

Title	GLAST ACD PARAMETRIC TEST BOARD MUX	
Size A	Document Number ACD-xxx	Rev -
Date: Monday, September 08, 2003	Sheet 17 of 30	

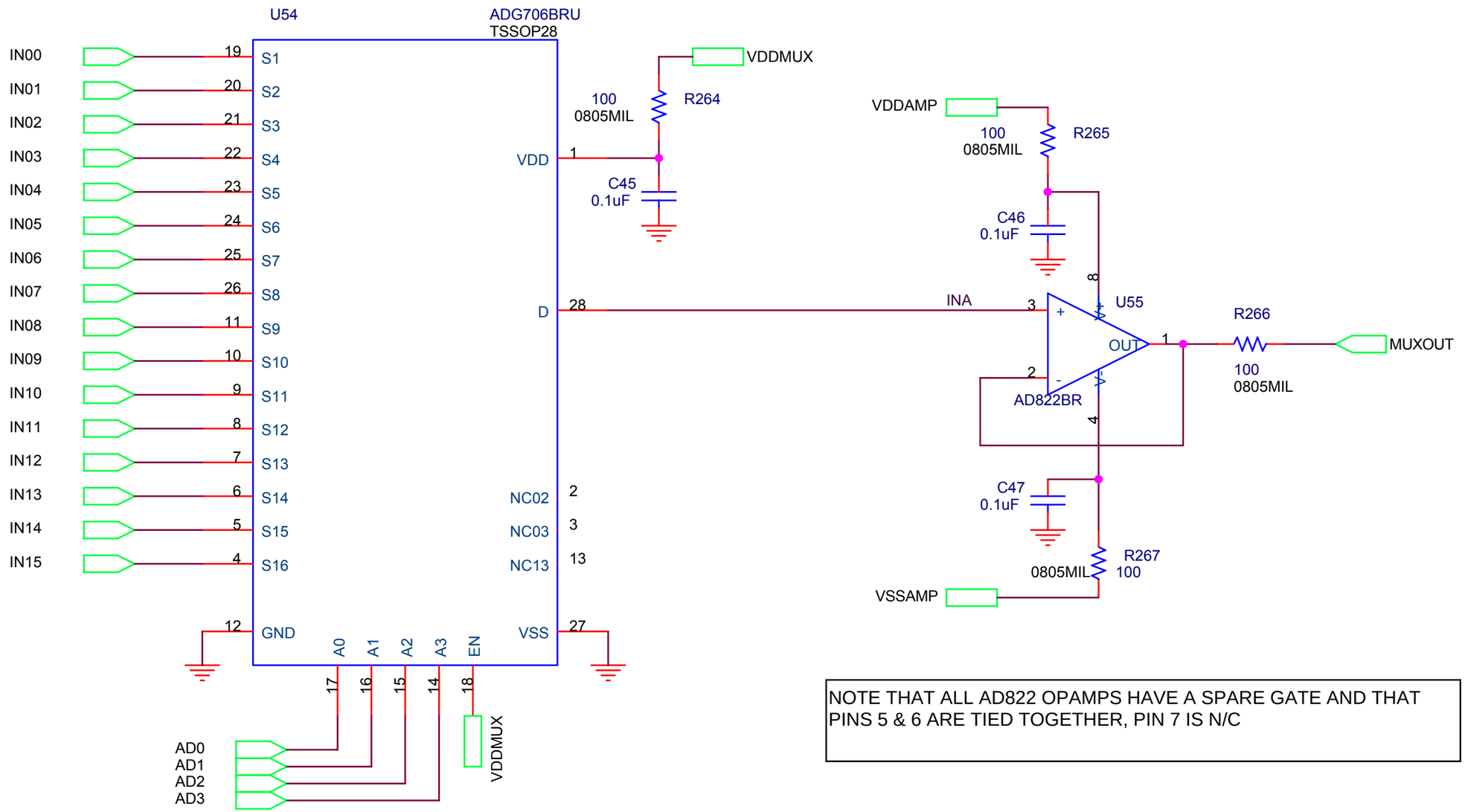

NOTE THAT ALL AD822 OPAMPS HAVE A SPARE GATE AND THAT PINS 5 & 6 ARE TIED TOGETHER, PIN 7 IS N/C

Title	GLAST ACD PARAMETRIC TEST BOARD MUX	
Size A	Document Number ACD-xxx	Rev -
Date: Monday, September 08, 2003	Sheet 20 of 30	

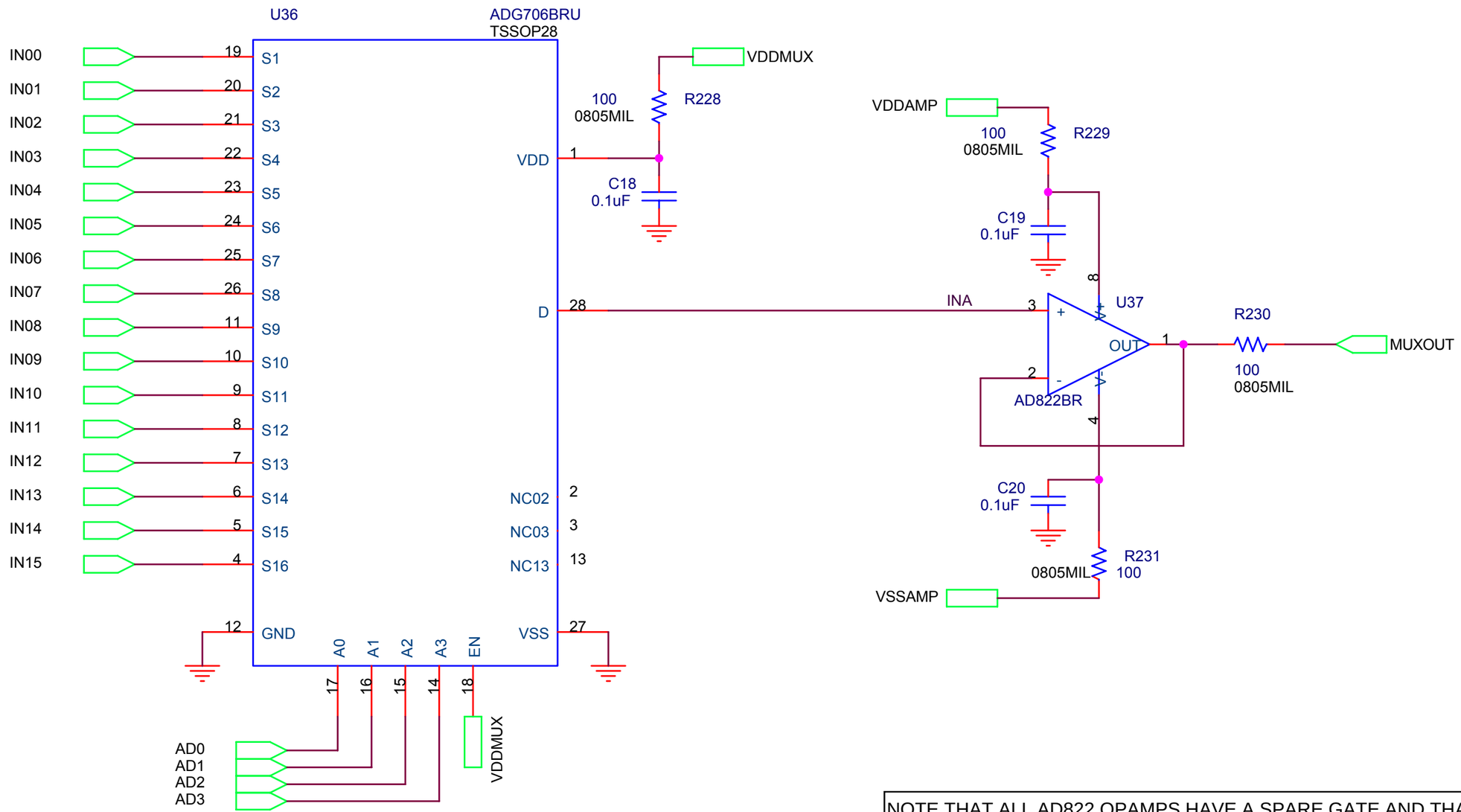

NOTE THAT ALL AD822 OPAMPS HAVE A SPARE GATE AND THAT PINS 5 & 6 ARE TIED TOGETHER, PIN 7 IS N/C

Title	GLAST ACD PARAMETRIC TEST BOARD MUX	
Size A	Document Number ACD-xxx	Rev -
Date: Monday, September 08, 2003	Sheet 11 of 30	

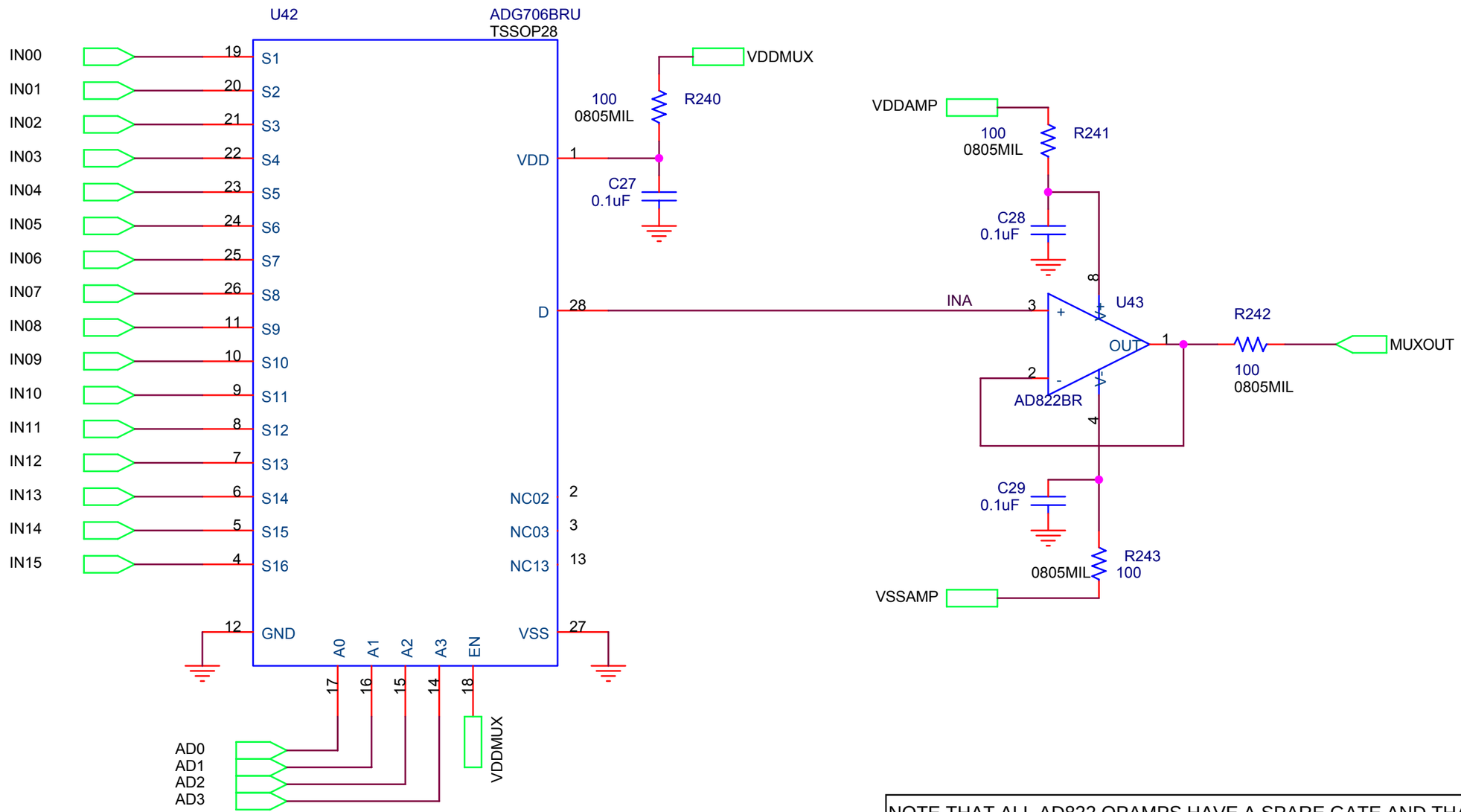

NOTE THAT ALL AD822 OPAMPS HAVE A SPARE GATE AND THAT PINS 5 & 6 ARE TIED TOGETHER, PIN 7 IS N/C

Title	GLAST ACD PARAMETRIC TEST BOARD MUX	
Size A	Document Number ACD-xxx	Rev -
Date: Monday, September 08, 2003	Sheet 14 of 30	

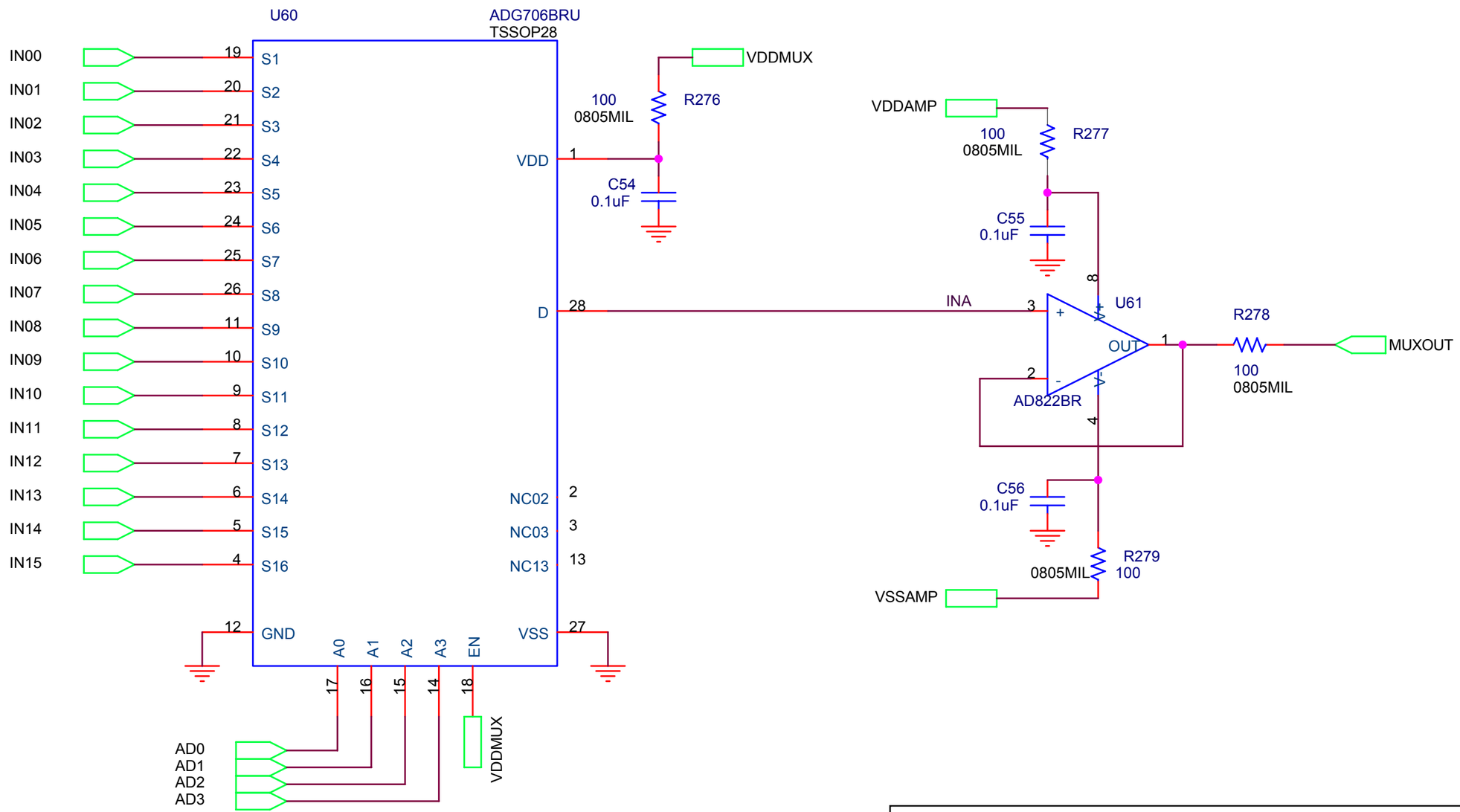

NOTE THAT ALL AD822 OPAMPS HAVE A SPARE GATE AND THAT PINS 5 & 6 ARE TIED TOGETHER, PIN 7 IS N/C

Title	GLAST ACD PARAMETRIC TEST BOARD MUX	
Size A	Document Number ACD-xxx	Rev -
Date: Monday, September 08, 2003	Sheet 23 of 30	

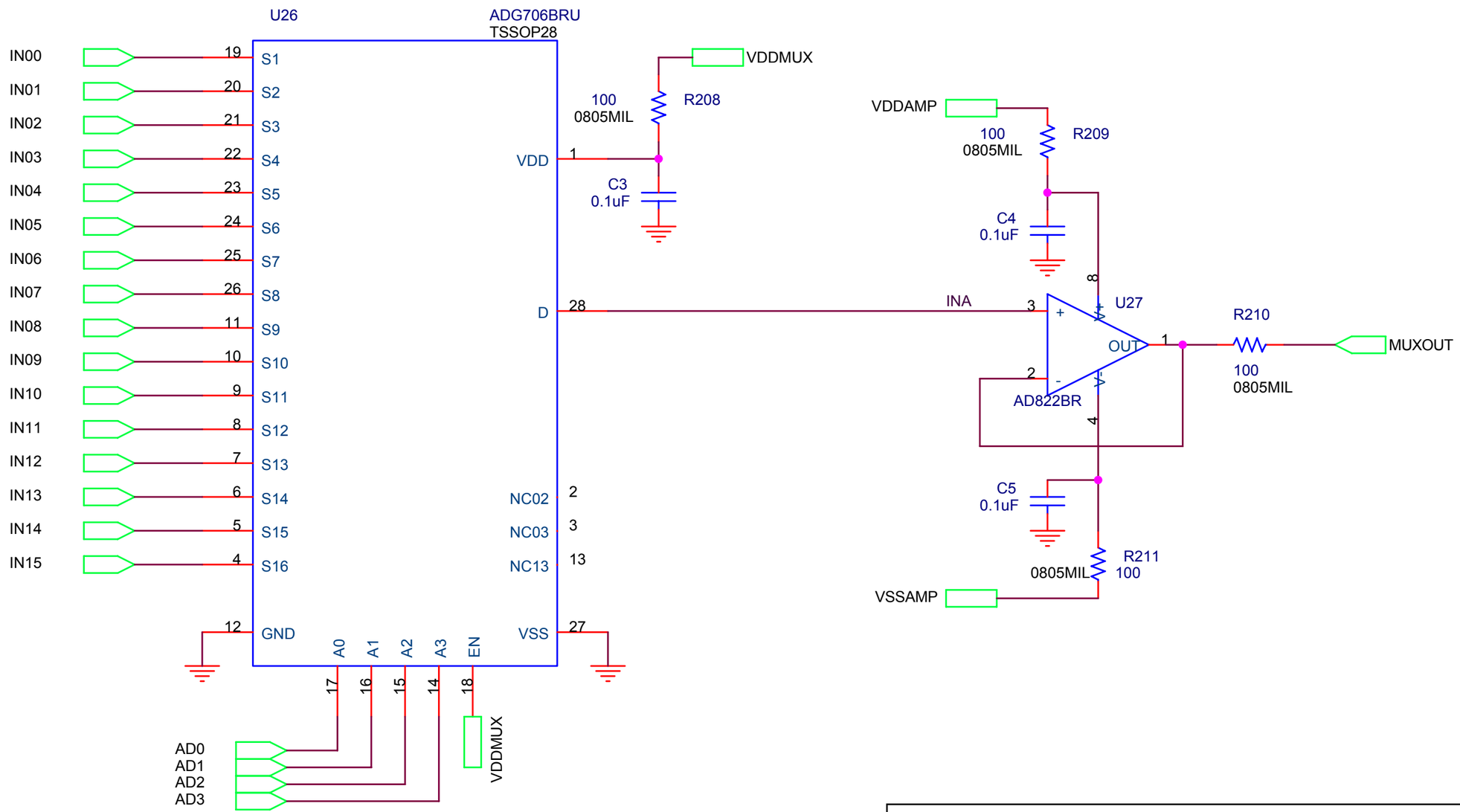

NOTE THAT ALL AD822 OPAMPS HAVE A SPARE GATE AND THAT PINS 5 & 6 ARE TIED TOGETHER, PIN 7 IS N/C

Title	GLAST ACD PARAMETRIC TEST BOARD MUX	
Size A	Document Number ACD-xxx	Rev -
Date: Monday, September 08, 2003	Sheet 6 of 30	

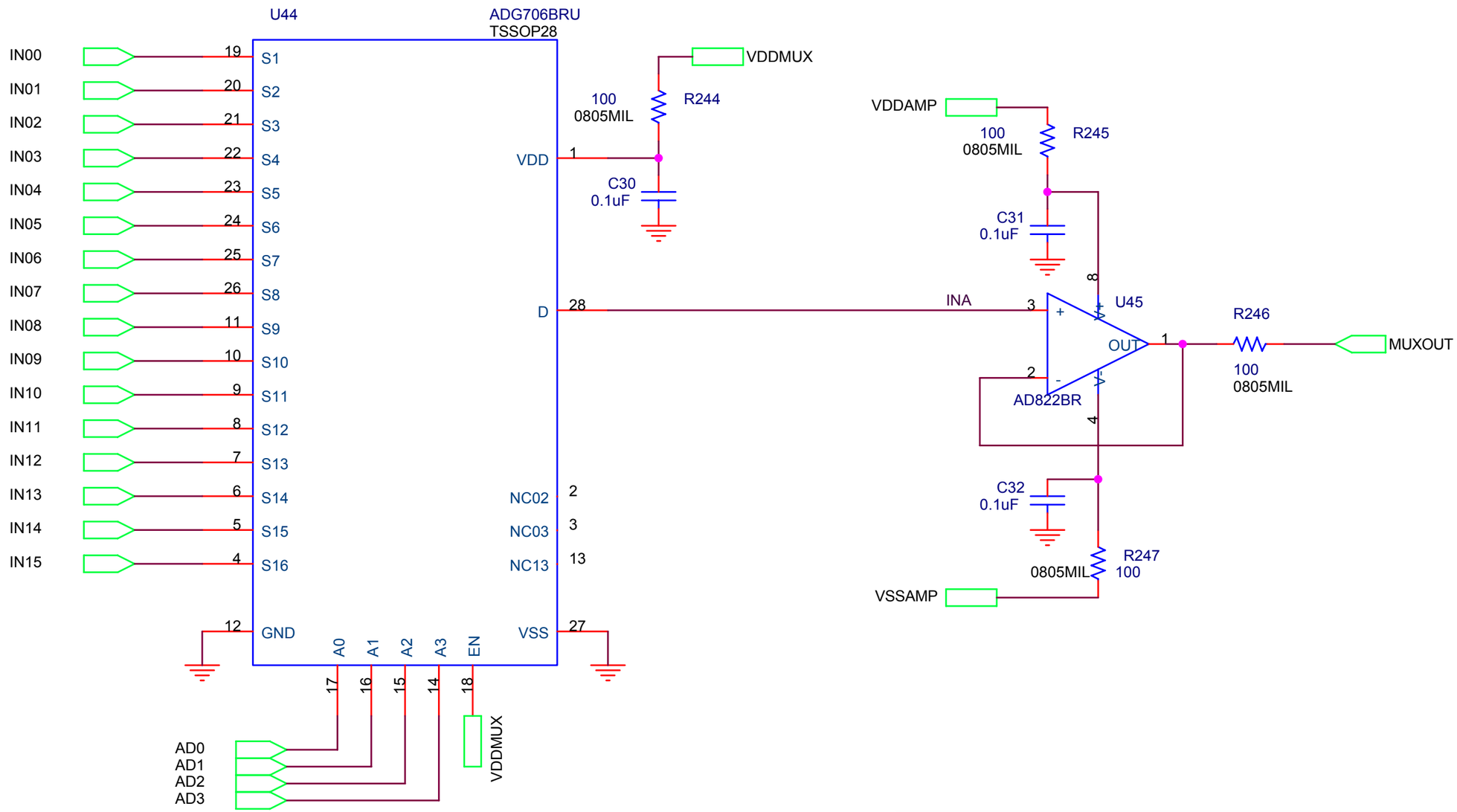

NOTE THAT ALL AD822 OPAMPS HAVE A SPARE GATE AND THAT PINS 5 & 6 ARE TIED TOGETHER, PIN 7 IS N/C

Title	GLAST ACD PARAMETRIC TEST BOARD MUX	
Size A	Document Number ACD-xxx	Rev -
Date: Monday, September 08, 2003	Sheet 15 of 30	

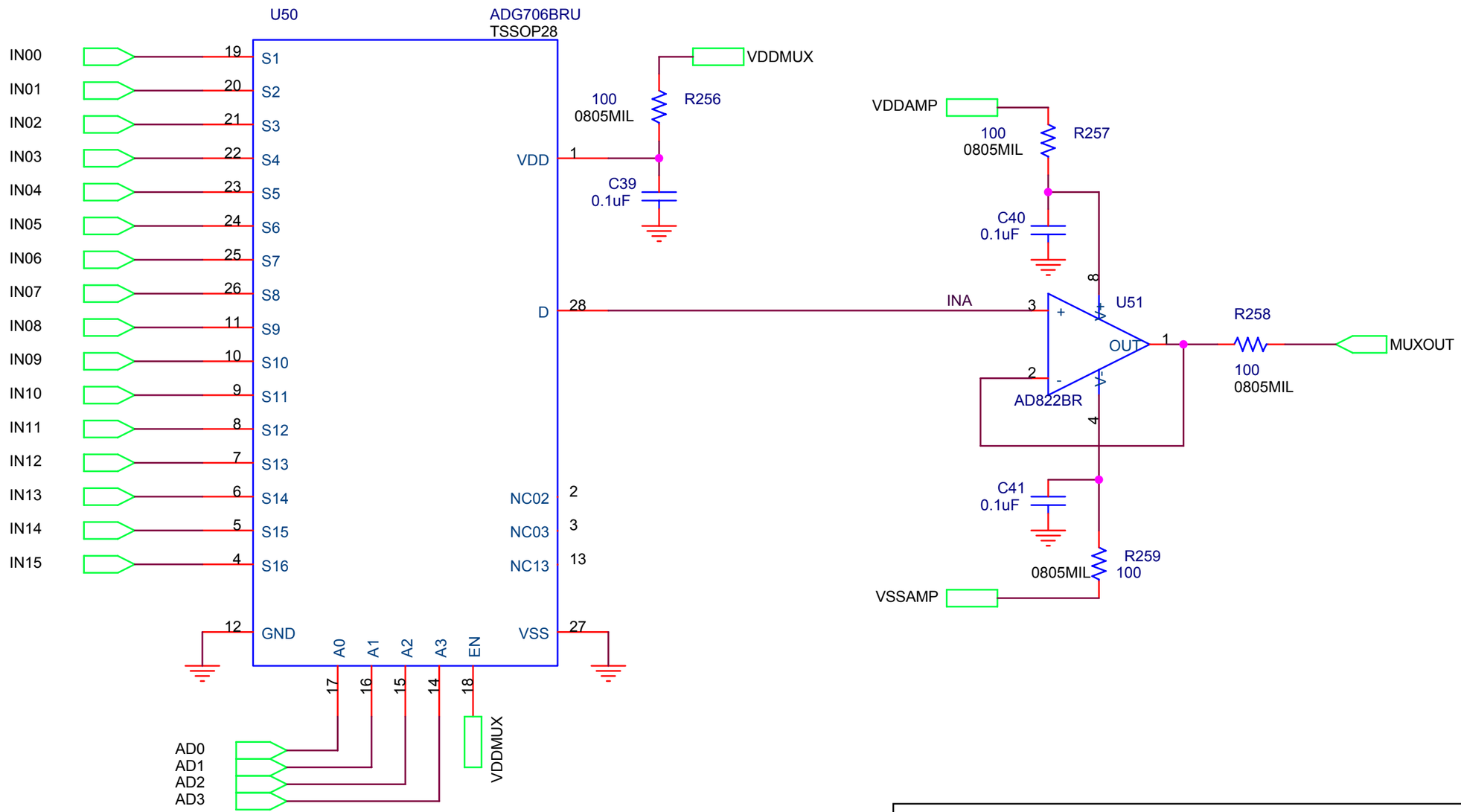

NOTE THAT ALL AD822 OPAMPS HAVE A SPARE GATE AND THAT PINS 5 & 6 ARE TIED TOGETHER, PIN 7 IS N/C

Title	GLAST ACD PARAMETRIC TEST BOARD MUX	
Size A	Document Number ACD-xxx	Rev -
Date: Monday, September 08, 2003	Sheet 18 of 30	

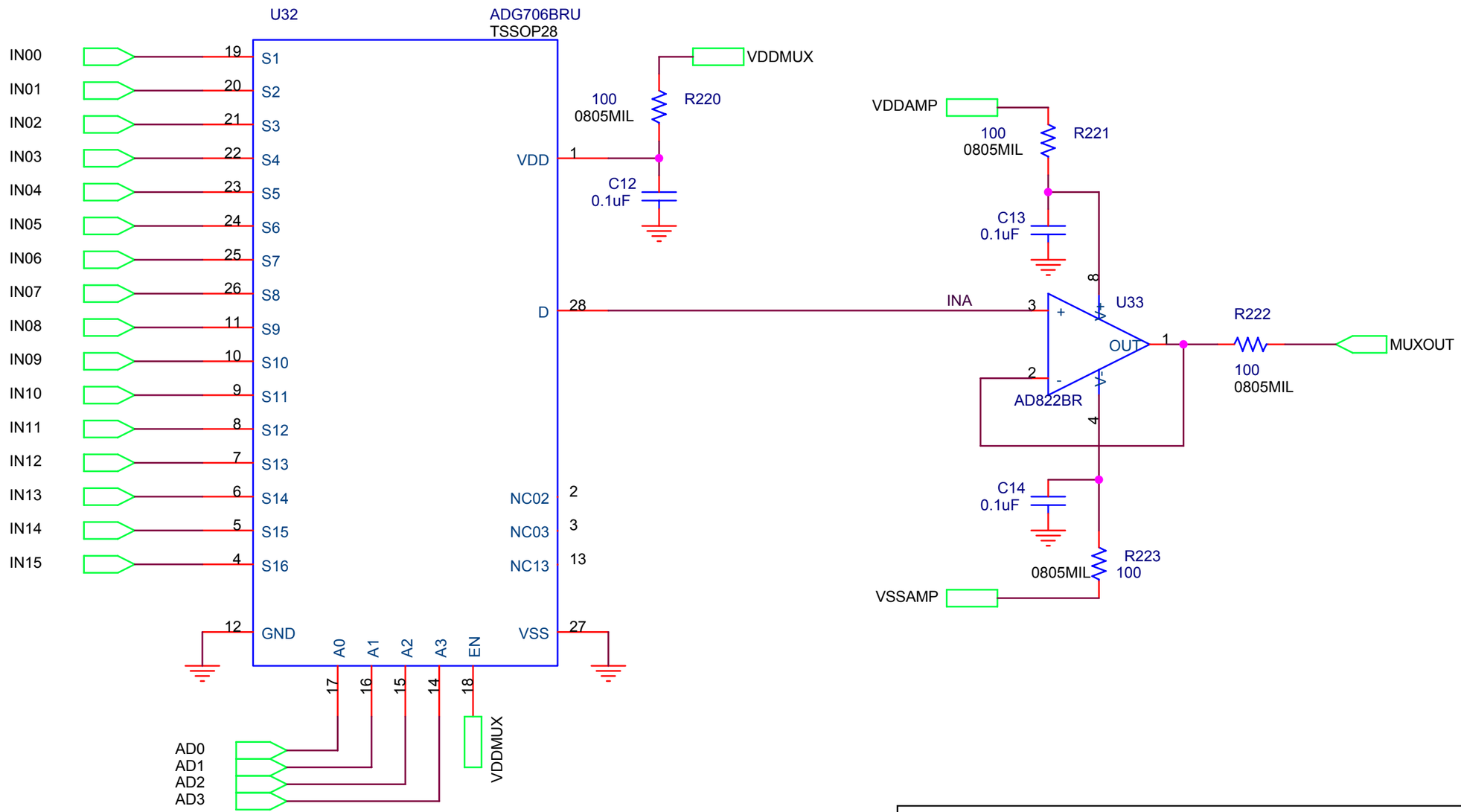

NOTE THAT ALL AD822 OPAMPS HAVE A SPARE GATE AND THAT PINS 5 & 6 ARE TIED TOGETHER, PIN 7 IS N/C

Title	GLAST ACD PARAMETRIC TEST BOARD MUX	
Size A	Document Number ACD-xxx	Rev -
Date: Monday, September 08, 2003	Sheet 9 of 30	

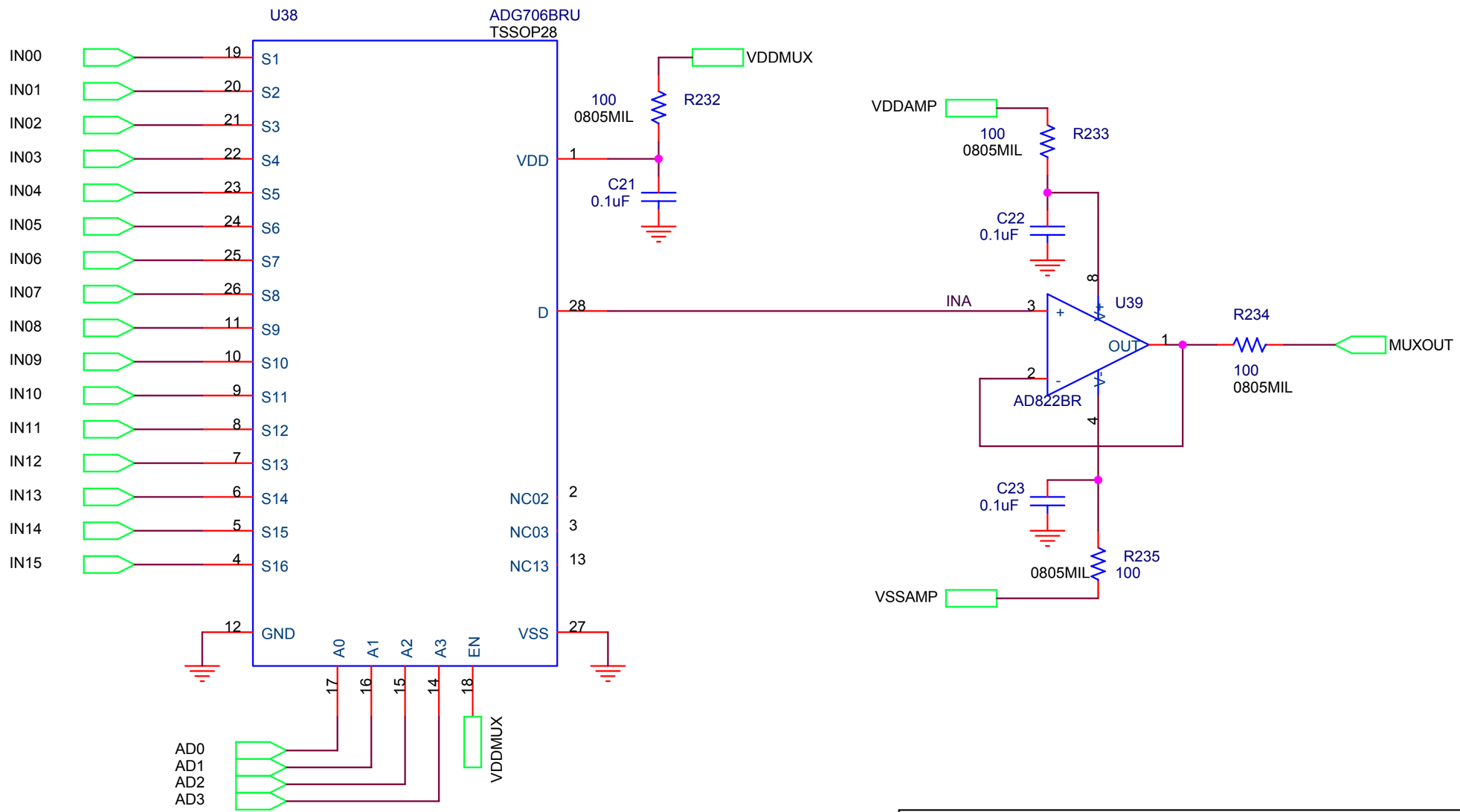

NOTE THAT ALL AD822 OPAMPS HAVE A SPARE GATE AND THAT PINS 5 & 6 ARE TIED TOGETHER, PIN 7 IS N/C

Title	GLAST ACD PARAMETRIC TEST BOARD MUX	
Size A	Document Number ACD-xxx	Rev -
Date: Monday, September 08, 2003	Sheet 12 of 30	

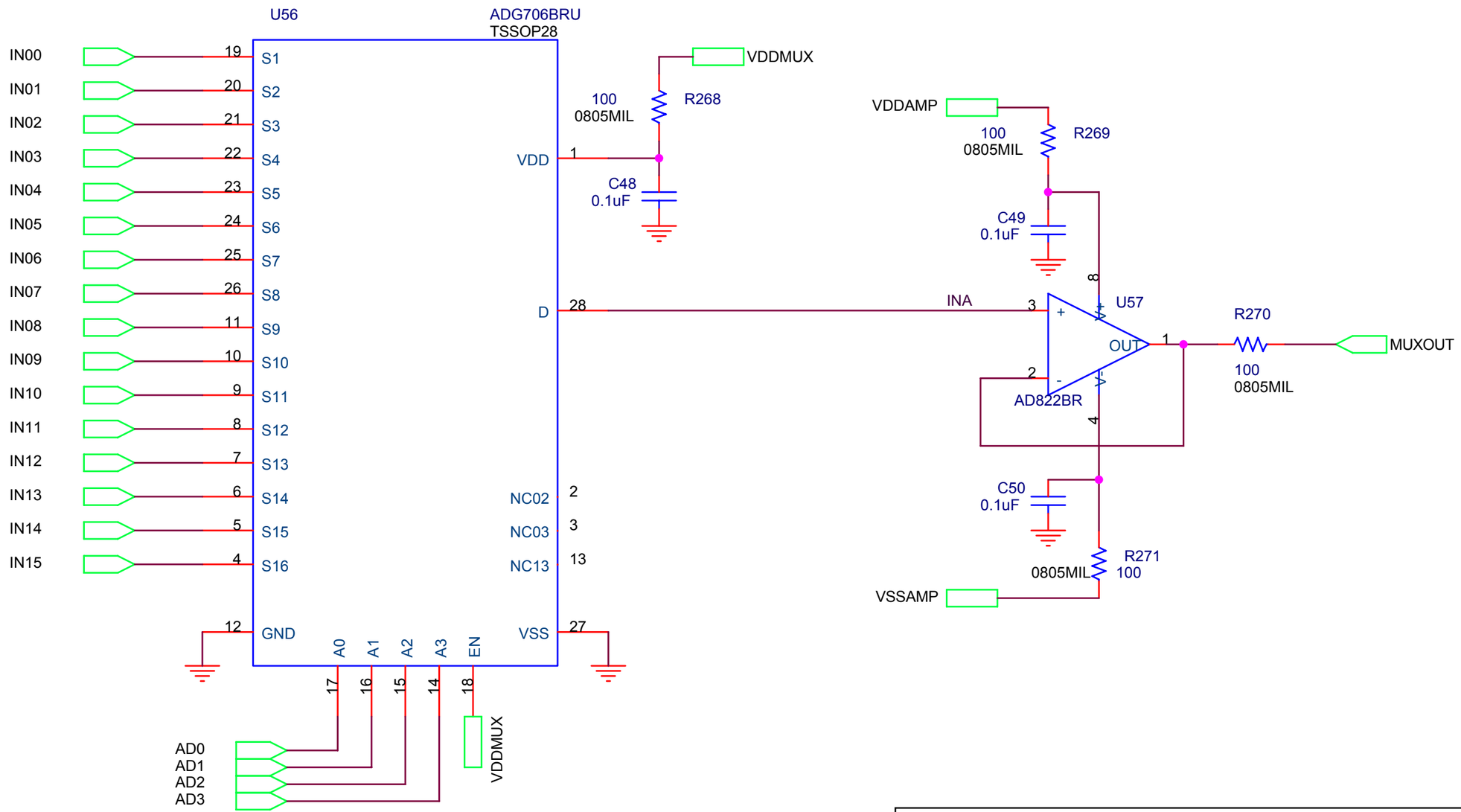

NOTE THAT ALL AD822 OPAMPS HAVE A SPARE GATE AND THAT PINS 5 & 6 ARE TIED TOGETHER, PIN 7 IS N/C

Title	GLAST ACD PARAMETRIC TEST BOARD MUX	
Size A	Document Number ACD-xxx	Rev -
Date: Monday, September 08, 2003	Sheet 21 of 30	

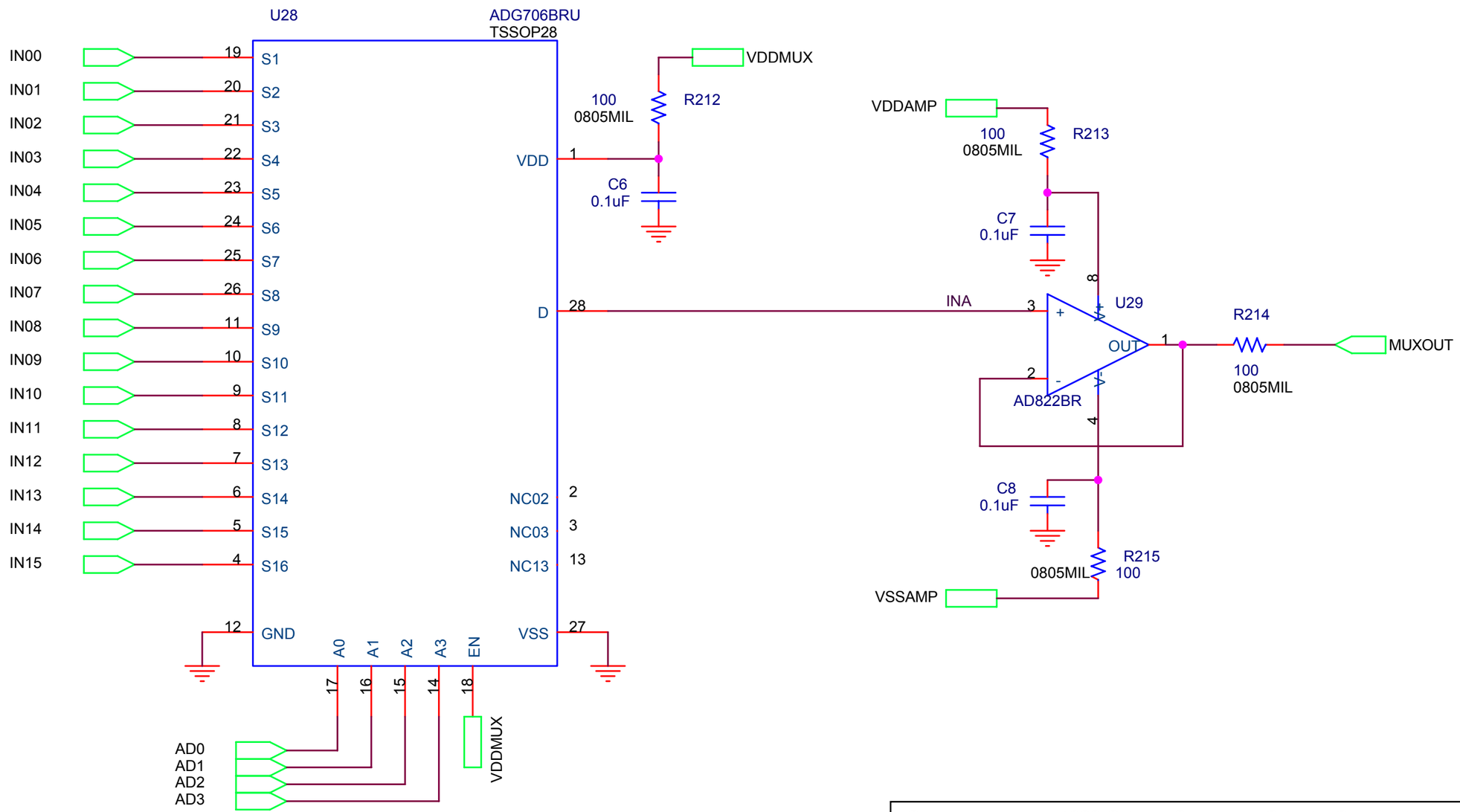

NOTE THAT ALL AD822 OPAMPS HAVE A SPARE GATE AND THAT PINS 5 & 6 ARE TIED TOGETHER, PIN 7 IS N/C

Title	GLAST ACD PARAMETRIC TEST BOARD MUX	
Size A	Document Number ACD-xxx	Rev -
Date: Monday, September 08, 2003	Sheet 7 of 30	

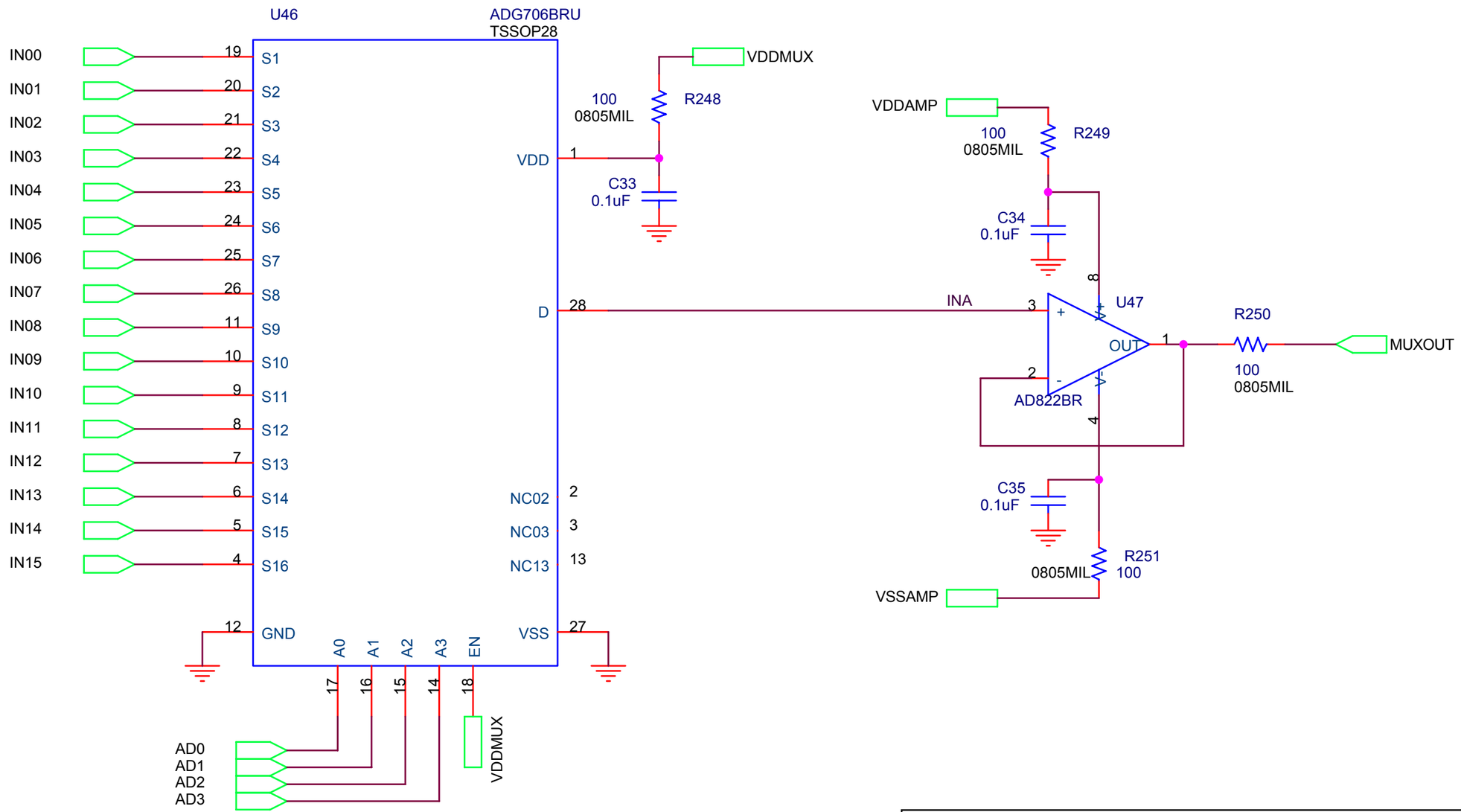

NOTE THAT ALL AD822 OPAMPS HAVE A SPARE GATE AND THAT PINS 5 & 6 ARE TIED TOGETHER, PIN 7 IS N/C

Title	GLAST ACD PARAMETRIC TEST BOARD MUX	
Size A	Document Number ACD-xxx	Rev -
Date: Monday, September 08, 2003	Sheet 16 of 30	

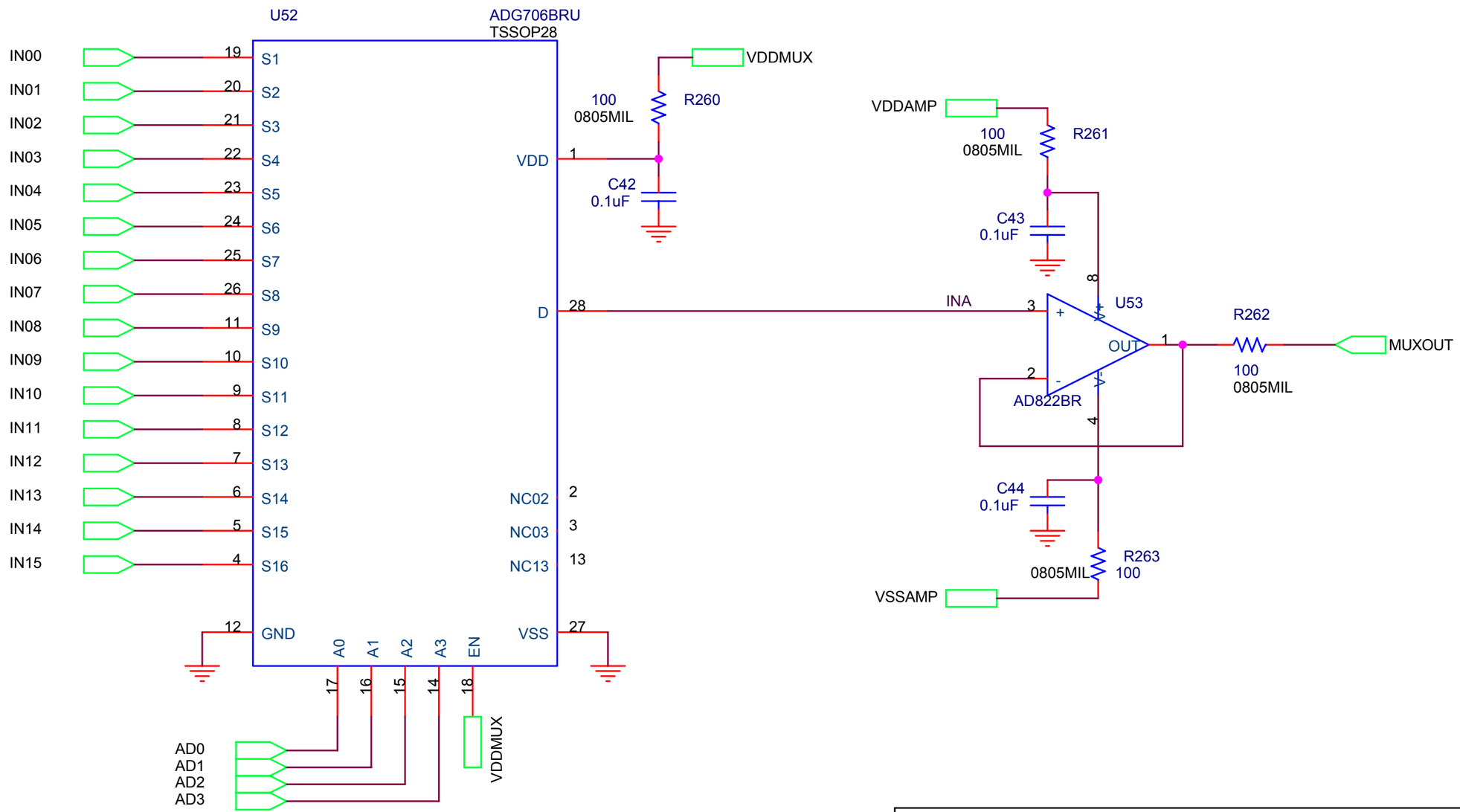

NOTE THAT ALL AD822 OPAMPS HAVE A SPARE GATE AND THAT PINS 5 & 6 ARE TIED TOGETHER, PIN 7 IS N/C

Title	GLAST ACD PARAMETRIC TEST BOARD MUX	
Size A	Document Number ACD-xxx	Rev -
Date: Monday, September 08, 2003	Sheet 19 of 30	

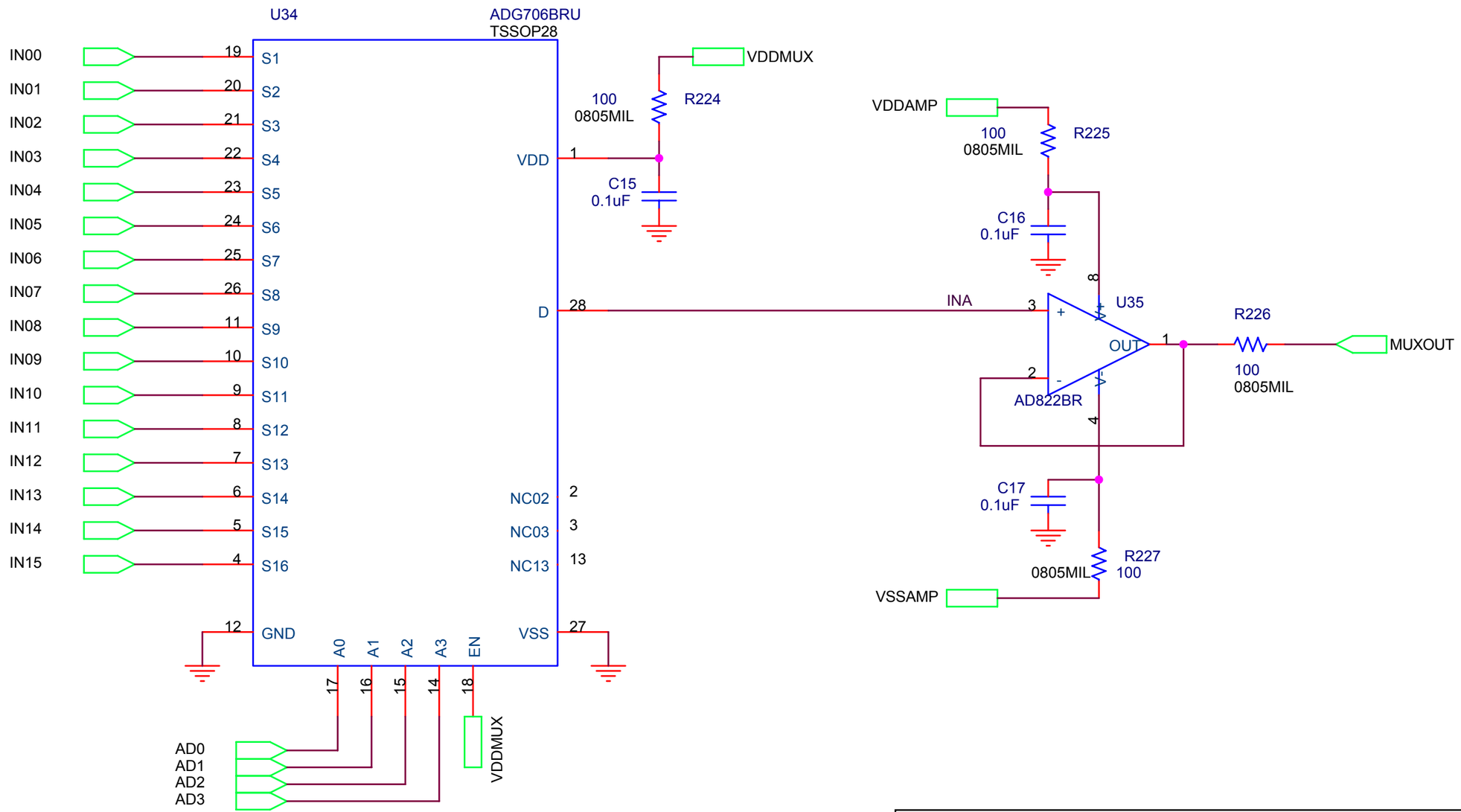

NOTE THAT ALL AD822 OPAMPS HAVE A SPARE GATE AND THAT PINS 5 & 6 ARE TIED TOGETHER, PIN 7 IS N/C

Title	GLAST ACD PARAMETRIC TEST BOARD MUX	
Size A	Document Number ACD-xxx	Rev -
Date: Monday, September 08, 2003	Sheet 10 of 30	

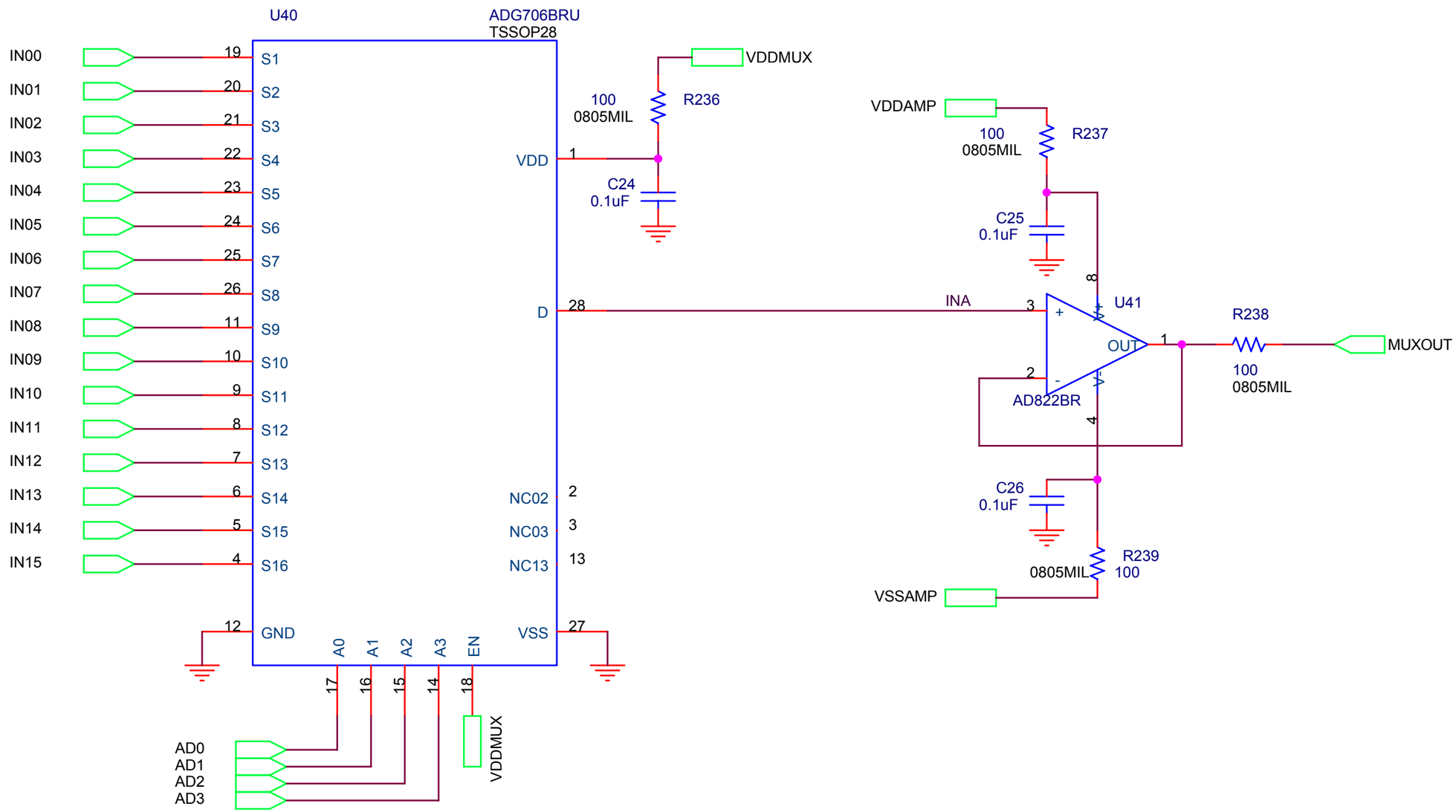

NOTE THAT ALL AD822 OPAMPS HAVE A SPARE GATE AND THAT PINS 5 & 6 ARE TIED TOGETHER, PIN 7 IS N/C

Title	GLAST ACD PARAMETRIC TEST BOARD MUX	
Size A	Document Number ACD-xxx	Rev -
Date: Monday, September 08, 2003	Sheet 13 of 30	

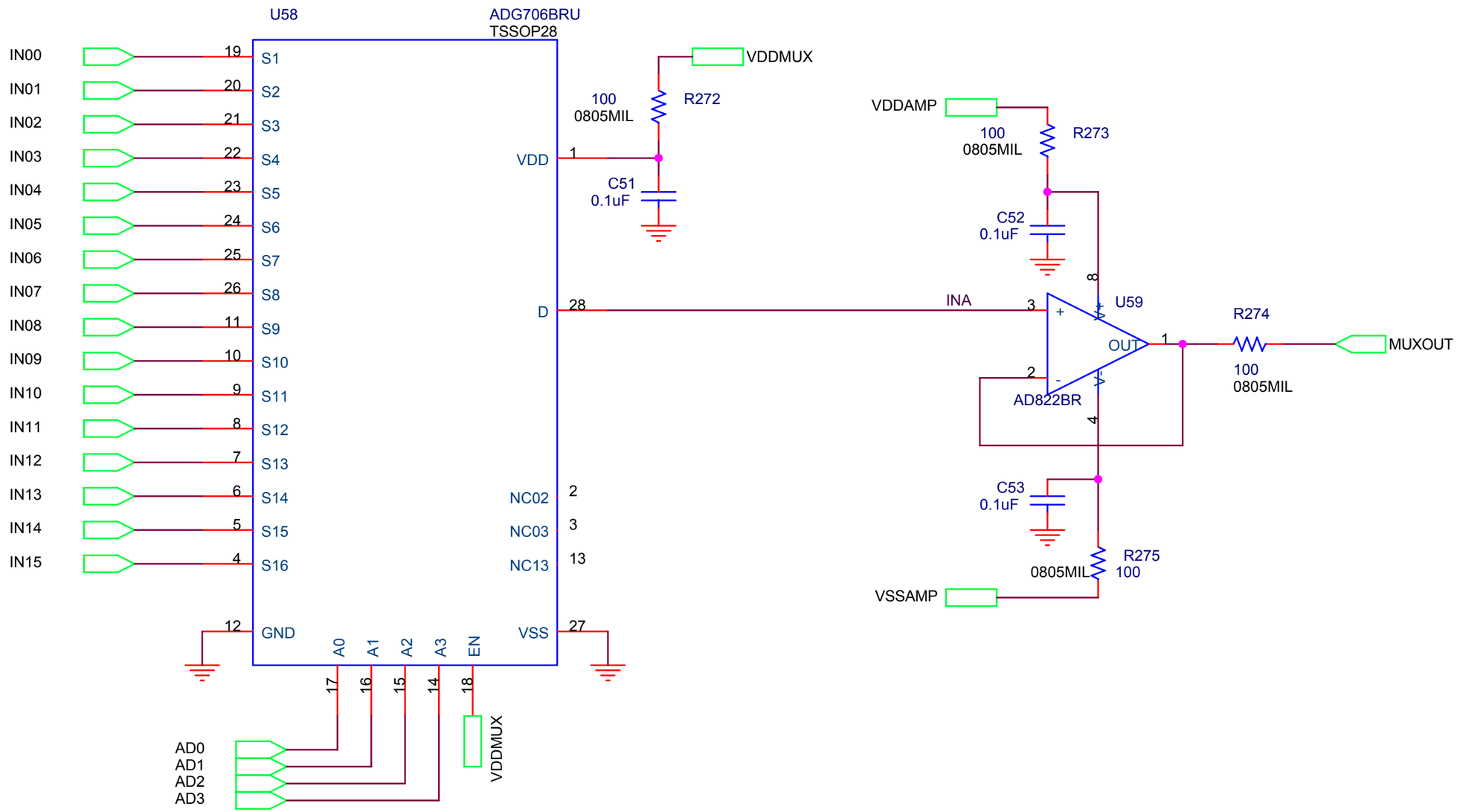

NOTE THAT ALL AD822 OPAMPS HAVE A SPARE GATE AND THAT PINS 5 & 6 ARE TIED TOGETHER, PIN 7 IS N/C

Title	GLAST ACD PARAMETRIC TEST BOARD MUX	
Size A	Document Number ACD-xxx	Rev -
Date: Monday, September 08, 2003	Sheet 22 of 30	

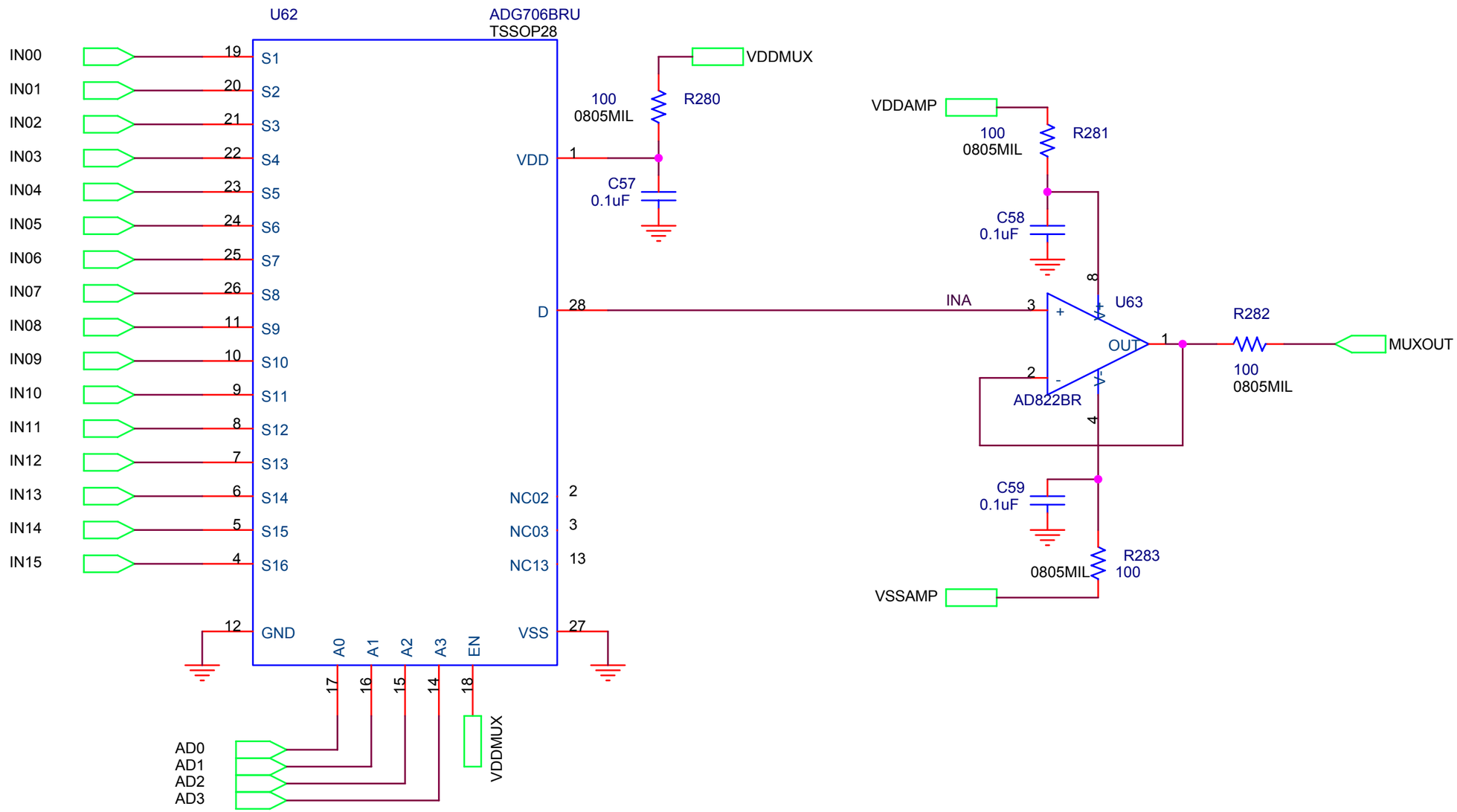

NOTE THAT ALL AD822 OPAMPS HAVE A SPARE GATE AND THAT PINS 5 & 6 ARE TIED TOGETHER, PIN 7 IS N/C

Title	GLAST ACD PARAMETRIC TEST BOARD MUX	
Size A	Document Number ACD-xxx	Rev -
Date: Monday, September 08, 2003	Sheet 24 of 30	

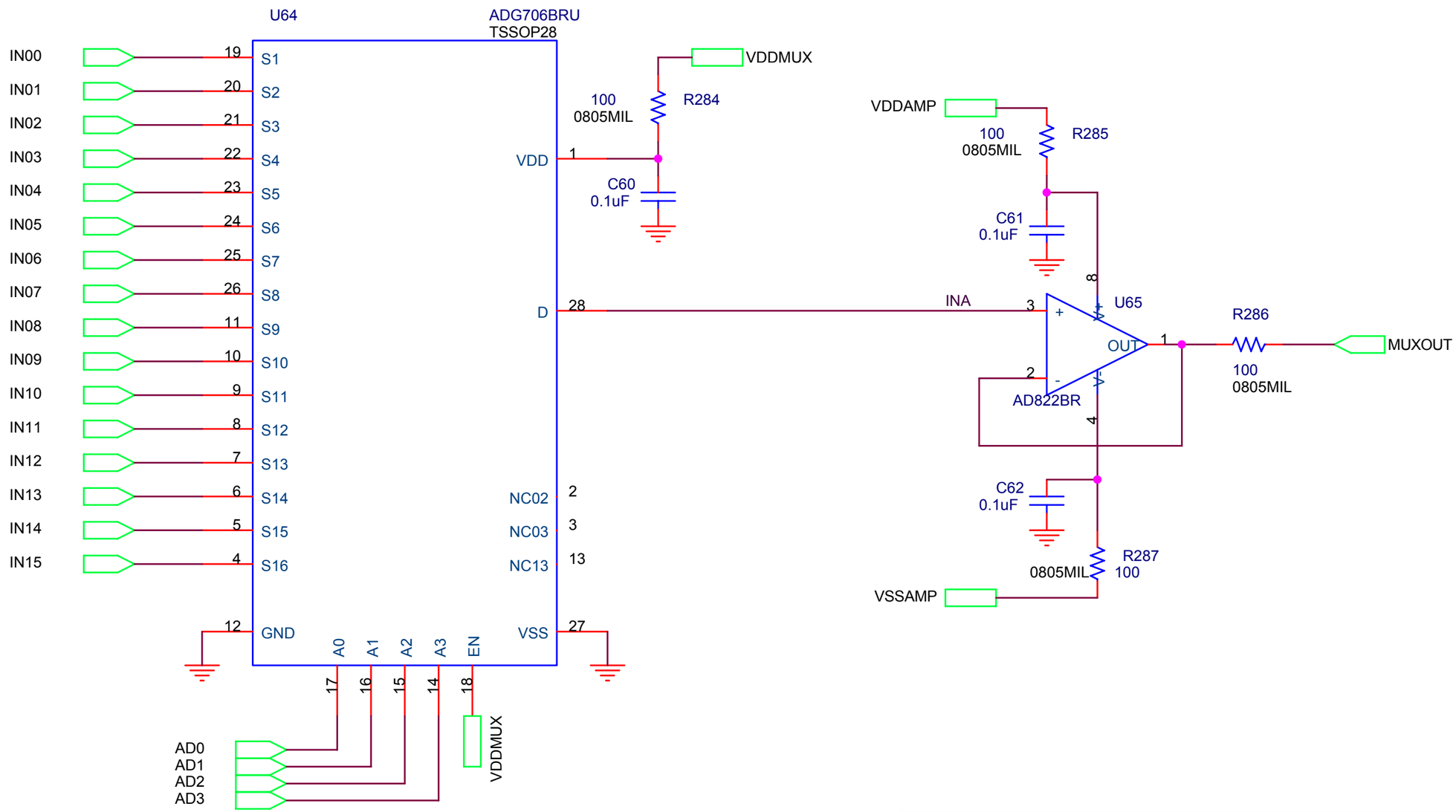

NOTE THAT ALL AD822 OPAMPS HAVE A SPARE GATE AND THAT PINS 5 & 6 ARE TIED TOGETHER, PIN 7 IS N/C

Title	GLAST ACD PARAMETRIC TEST BOARD MUX	
Size A	Document Number ACD-xxx	Rev -
Date: Monday, September 08, 2003	Sheet 25 of 30	