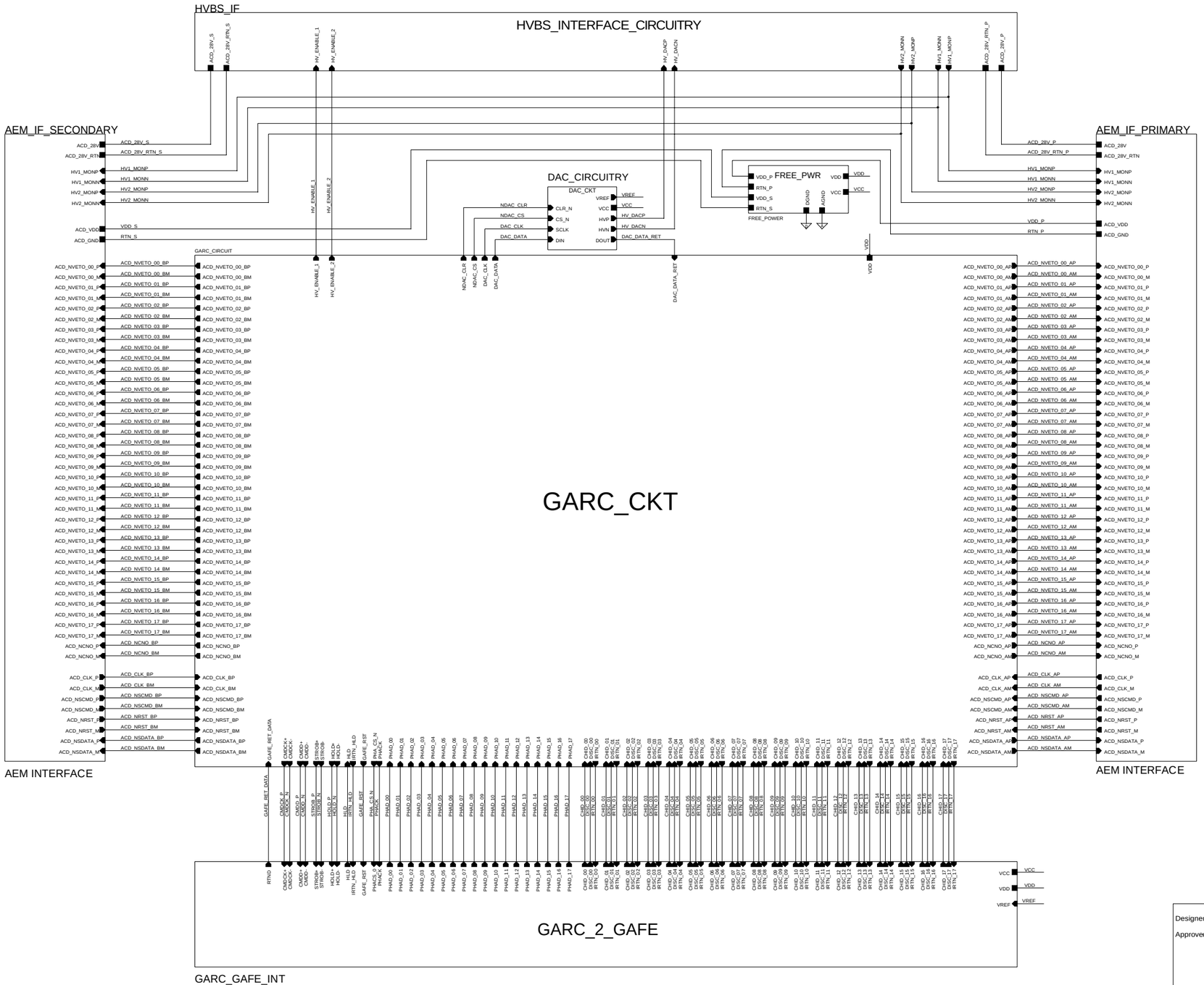

Schematic Pages for ACD FREE (TOTAL = 29)

Page 1: FREE_TOP_SCHEMATIC
Page 2: HVBS_INTERFACE_CIRCUITRY
Page 3: DAC_CIRCUITRY
Page 4: AEM_IF_PRIMARY
Page 5: AEM_IF_SECONDARY
Page 6: FREE_PWR
Page 7: GARC_CKT
Page 8: GARC_2_GAFE
Page 9: FREE_ID_CKT
Page 10: RST_CKT
Page 11: ADDRESS_BUSSES
Page 12_00: GAFE_CHANNEL_00
Page 12_01 GAFE_CHANNEL_01
Page 12_02: GAFE_CHANNEL_02
Page 12_03: GAFE_CHANNEL_03
Page 12_04: GAFE_CHANNEL_04
Page 12_05: GAFE_CHANNEL_05
Page 12_06: GAFE_CHANNEL_06
Page 12_07: GAFE_CHANNEL_07
Page 12_08: GAFE_CHANNEL_08
Page 12_09: GAFE_CHANNEL_09
Page 12_10: GAFE_CHANNEL_10
Page 12_11: GAFE_CHANNEL_11
Page 12_12: GAFE_CHANNEL_12
Page 12_13: GAFE_CHANNEL_13
Page 12_14: GAFE_CHANNEL_14
Page 12_15: GAFE_CHANNEL_15
Page 12_16: GAFE_CHANNEL_16
Page 12_17: GAFE_CHANNEL_17

November 18, 2002

Designer: D. Sheppard _____

Approved: G. Unger _____

NASA Goddard Space Flight Center
Laboratory for High Energy Astrophysics
Greenbelt, Maryland 20771

Dave Sheppard / x6539

GAMMA-RAY LARGE AREA SPACE TELESCOPE (GLAST)
ANTI-COINCIDENCE DETECTOR (ACD)
FRONT-END EVENT ELECTRONICS (FREE)

FRONT END EVENT ELECTRONICS (FRE E) PCB

"Sure, we could have designed a better board, but it couldn't have taken any longer"

Monday, September 30, 2002

Size	CAGE Code	DWG NO	Rev
D	<Cage Code>	GD-TBD	-

Scale

Sheet 1 of 29

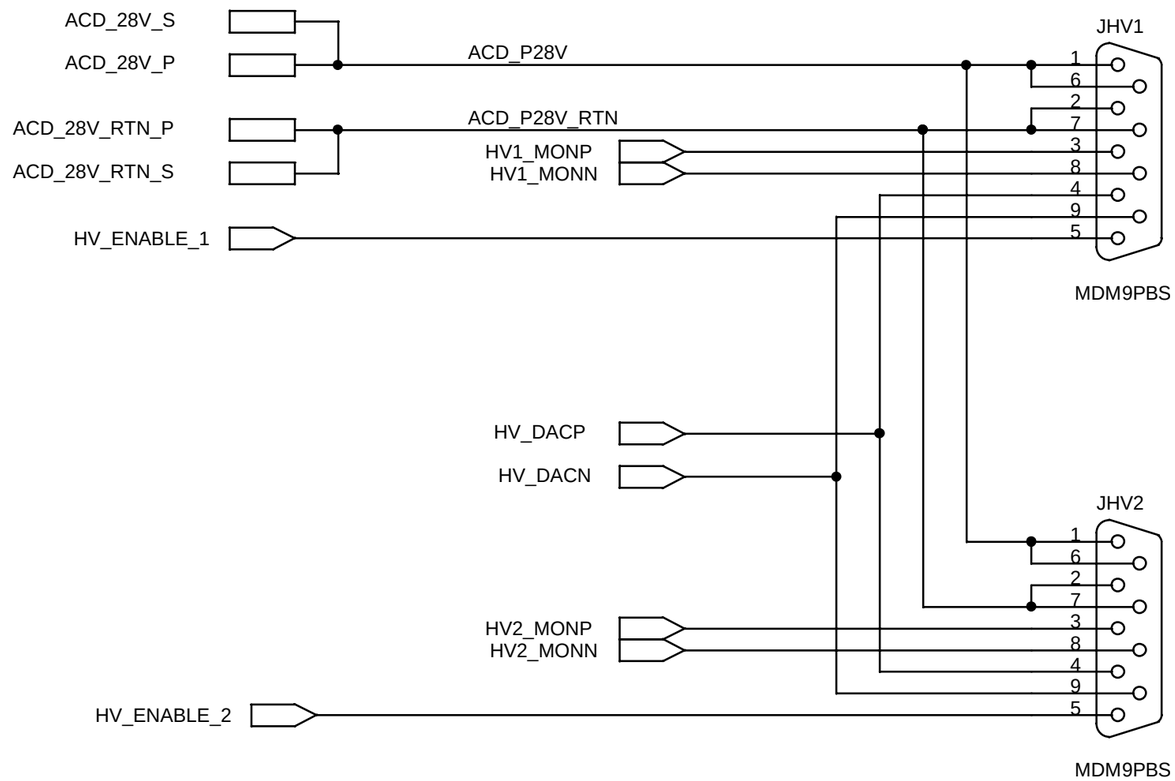

Dave Sheppard, x66539

Title
HVBS INTERFACE CIRCUITRY

Size	Document Number	Rev
A	<Doc>	-

Date: Thursday, September 26, 2002 Sheet 12 of 29

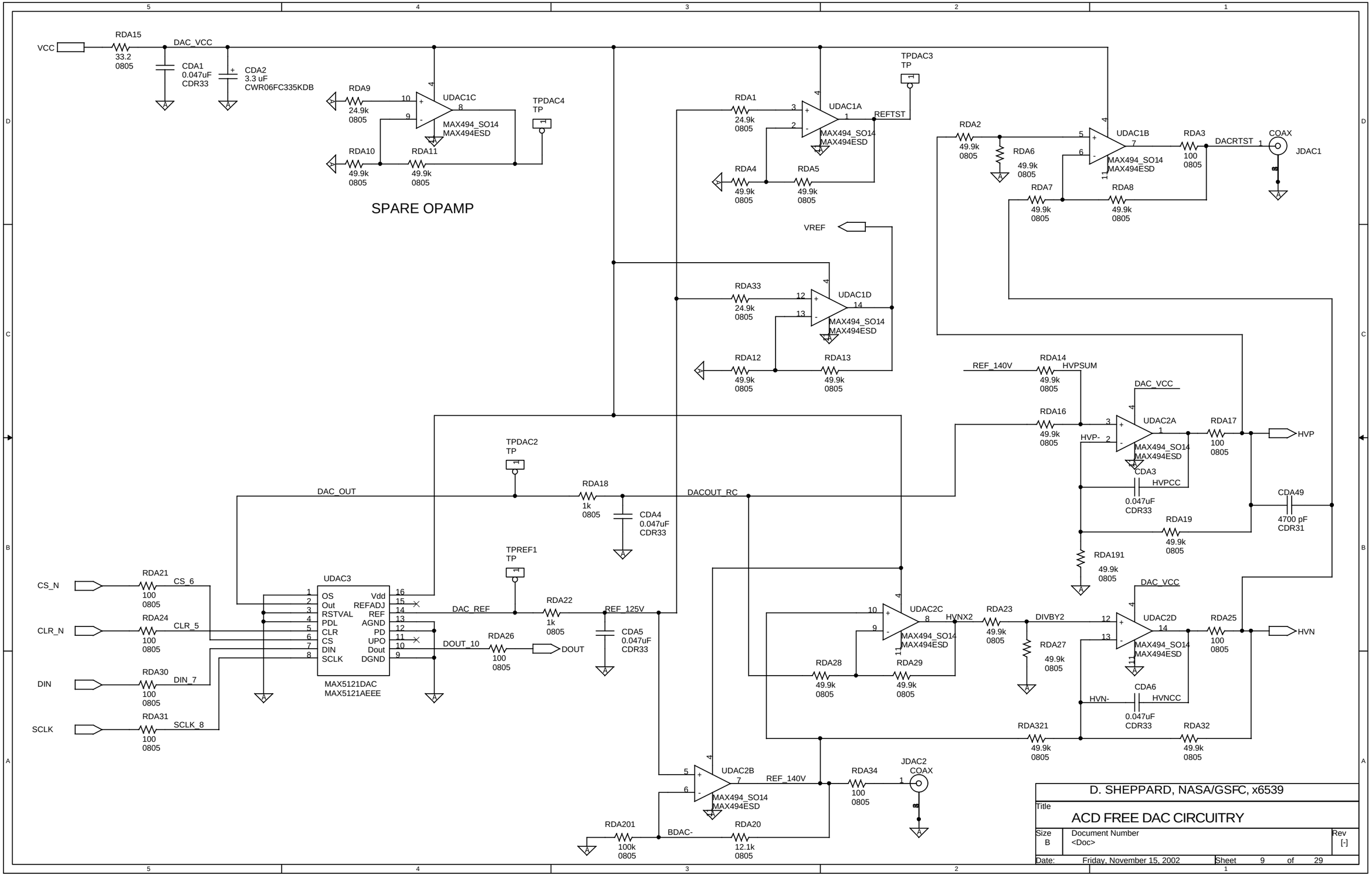
VCC
RDA15
33.2
0805
DAC_VCC
CDA1
0.047uF
CDR33
CDA2
3.3 uF
CWR06FC335KDB
RDA9
24.9k
0805
UDAC1C
MAX494_SO14
MAX494ESD
TPDAC4
TP
RDA10
49.9k
0805
RDA11
49.9k
0805
SPARE OPAMP
RDA1
24.9k
0805
UDAC1A
REFTST
TPDAC3
TP
RDA4
49.9k
0805
RDA5
49.9k
0805
RDA2
49.9k
0805
RDA6
49.9k
0805
UDAC1B
RDA3
100
0805
DACRTST
COAX
JDAC1
RDA7
49.9k
0805
RDA8
49.9k
0805
VREF
RDA33
24.9k
0805
UDAC1D
RDA12
49.9k
0805
RDA13
49.9k
0805
REF_140V
RDA14
49.9k
0805
HVPSUM
DAC_VCC
RDA16
49.9k
0805
HVP-
UDAC2A
RDA17
100
0805
HVP
CDA3
0.047uF
CDR33
HVPCC
CDA49
4700 pF
CDR31
RDA19
49.9k
0805
RDA191
49.9k
0805
TPDAC2
TP
DAC_OUT
RDA18
1k
0805
CDA4
0.047uF
CDR33
DACOUT_RC
TPREF1
TP
CS_N
RDA21
100
0805
CS_6
CLR_N
RDA24
100
0805
CLR_5
DIN
RDA30
100
0805
DIN_7
SCLK
RDA31
100
0805
SCLK_8
UDAC3
OS
Out
RSTVAL
PDL
CLR
CS
DIN
SCLK
Vdd
REFADJ
REF
AGND
PD
UPO
Dout
DGND
MAX5121DAC
MAX5121AEEE
DAC_REF
RDA22
1k
0805
REF_125V
CDA5
0.047uF
CDR33
DOUT_10
RDA26
100
0805
DOUT
UDAC2C
HVNX2
RDA23
49.9k
0805
DIVBY2
RDA27
49.9k
0805
RDA28
49.9k
0805
RDA29
49.9k
0805
DAC_VCC
UDAC2D
RDA25
100
0805
HVN
CDA6
0.047uF
CDR33
HVN-
HVNCC
RDA321
49.9k
0805
RDA32
49.9k
0805
UDAC2B
REF_140V
RDA34
100
0805
JDAC2
COAX
RDA201
100k
0805
BDAC-
RDA20
12.1k
0805
D. SHEPPARD, NASA/GSFC, x6539
Title
ACD FREE DAC CIRCUITRY
Size
B
Document Number
<Doc>
Rev
[-]
Date: Friday, November 15, 2002
Sheet 9 of 29

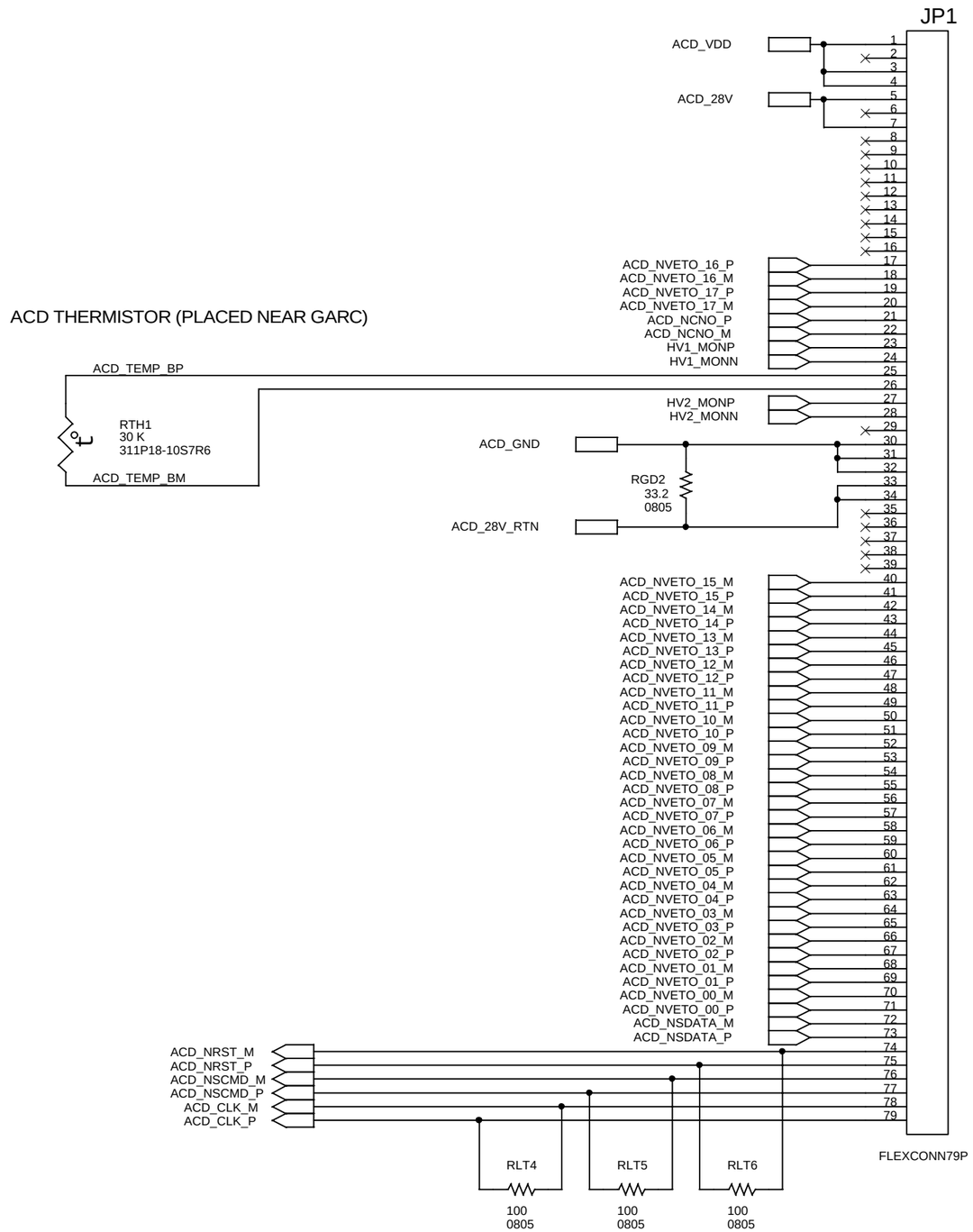

ACD THERMISTOR (PLACED NEAR GARC)

Dave Sheppard, x66539

Title	ACD AEM INTERFACE CONNECTOR
Size B	Document Number <Doc>
Rev	[-]
Date:	Thursday, September 26, 2002
Sheet	5 of 29

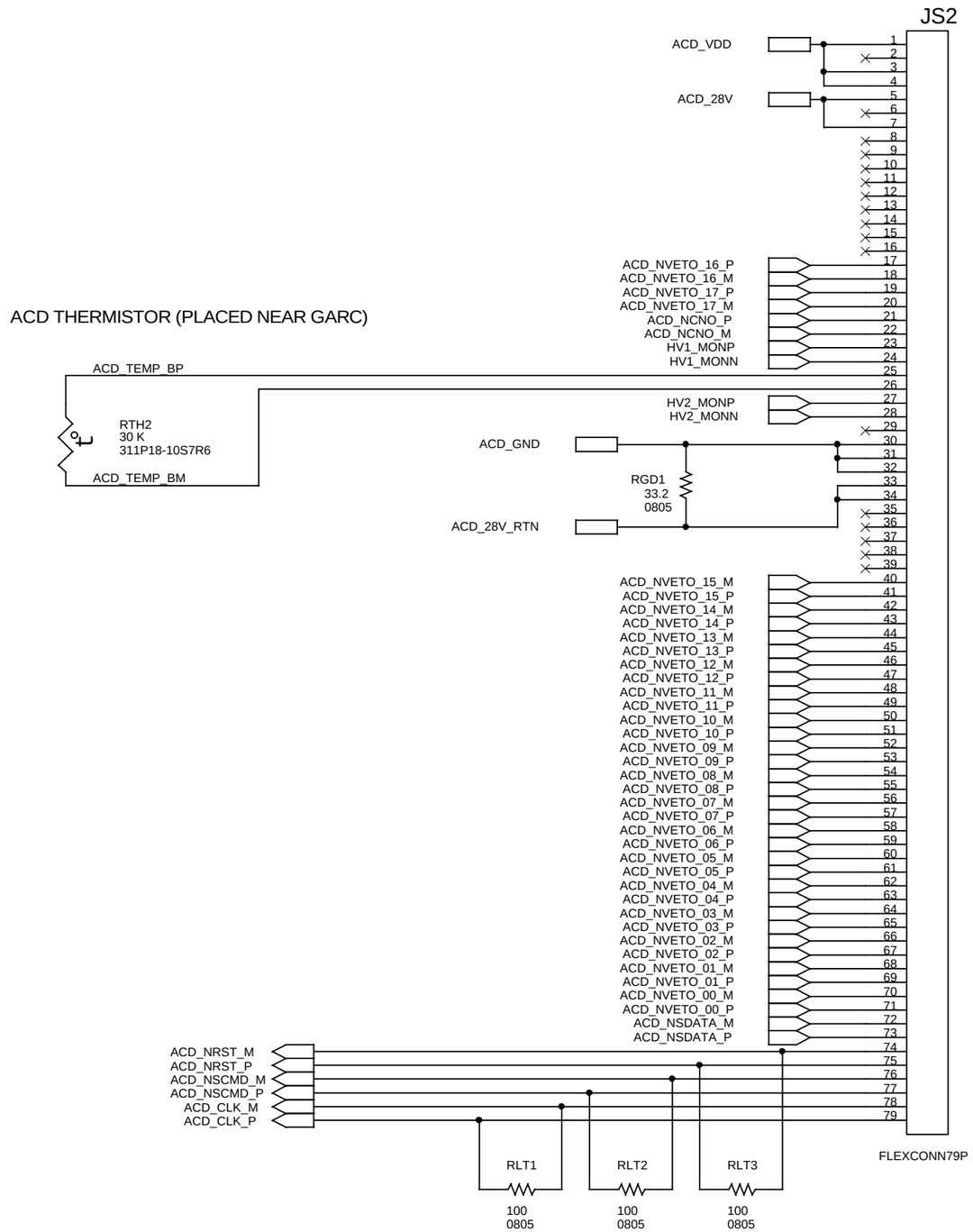

Dave Sheppard, x66539

Title	ACD AEM INTERFACE CONNECTOR	
Size B	Document Number <Doc>	Rev [-]
Date: Thursday, September 26, 2002	Sheet 3 of 29	

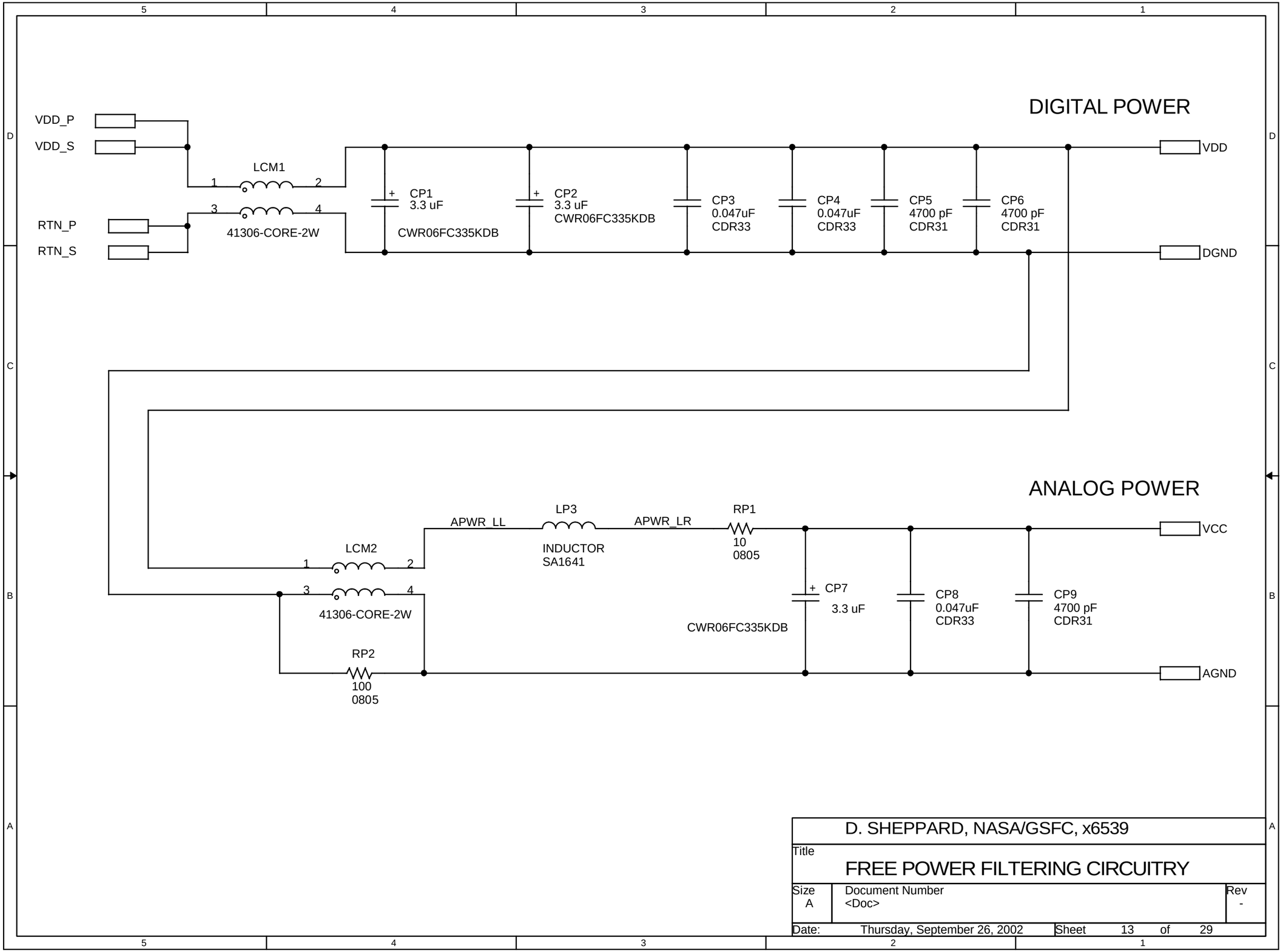

D. SHEPPARD, NASA/GSFC, x6539

Title

FREE POWER FILTERING CIRCUITRY

Size	Document Number	Rev
A	<Doc>	-

Date: Thursday, September 26, 2002 Sheet 13 of 29

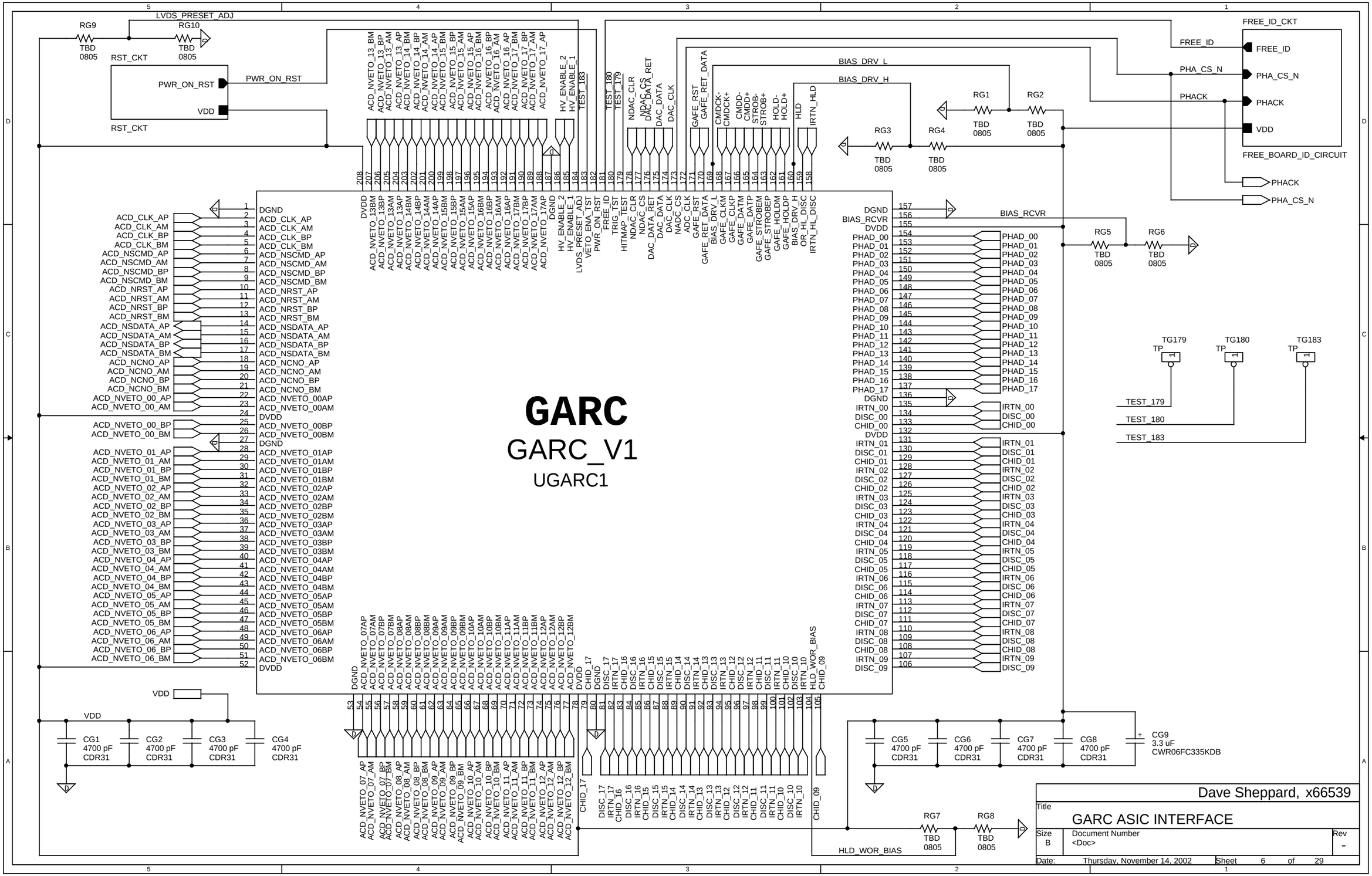
GARC
GARC_V1
UGARC1
LVDS_PRESET_ADJ
RG9 TBD 0805
RG10 TBD 0805
RST_CKT
PWR_ON_RST
VDD
FREE_ID_CKT
FREE_ID
PHA_CS_N
PHACK
VDD
FREE_BOARD_ID_CIRCUIT
BIAS_DRV_L
BIAS_DRV_H
RG1 TBD 0805
RG2 TBD 0805
RG3 TBD 0805
RG4 TBD 0805
BIAS_RCVR
RG5 TBD 0805
RG6 TBD 0805
TG179 TP
TG180 TP
TG183 TP
TEST_179
TEST_180
TEST_183
CG1 4700 pF CDR31
CG2 4700 pF CDR31
CG3 4700 pF CDR31
CG4 4700 pF CDR31
CG5 4700 pF CDR31
CG6 4700 pF CDR31
CG7 4700 pF CDR31
CG8 4700 pF CDR31
CG9 3.3 uF CWR06FC335KDB
RG7 TBD 0805
RG8 TBD 0805
HLD_WOR_BIAS
Dave Sheppard, x66539
Title
GARC ASIC INTERFACE
Size B
Document Number
<Doc>
Rev -
Date: Thursday, November 14, 2002
Sheet 6 of 29

18 GAFE Channels

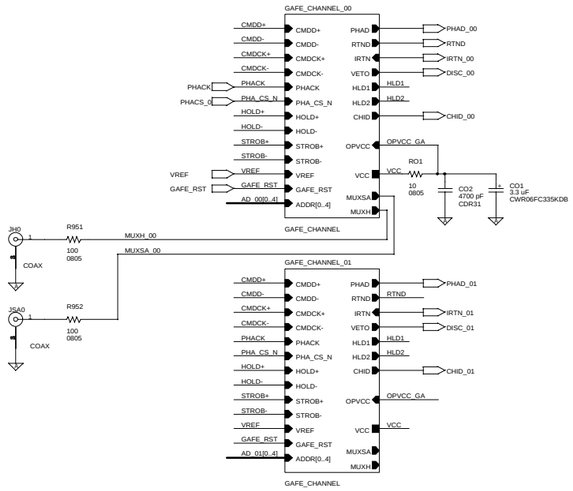

CHANNEL GROUP
00 & 01

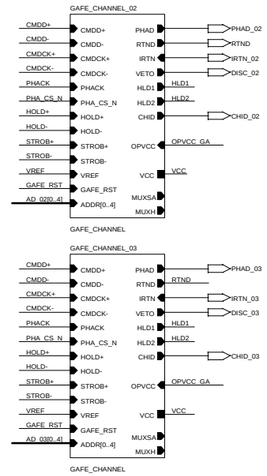

CHANNEL GROUP
02 & 03

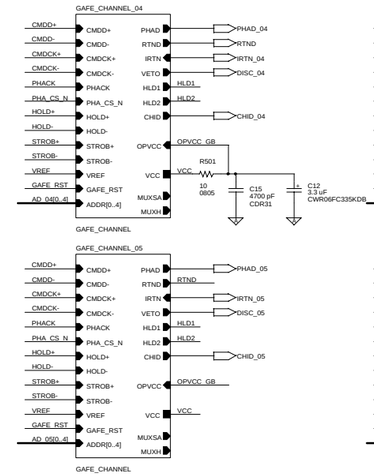

CHANNEL GROUP
04 & 05

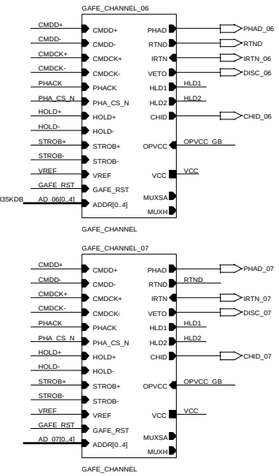

CHANNEL GROUP
06 & 07

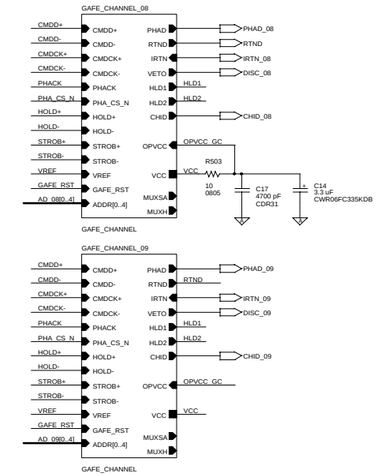

CHANNEL GROUP
08 & 09

TERMINATIONS FOR COMMON DIFFERENTIAL GAFE SIGNA LS

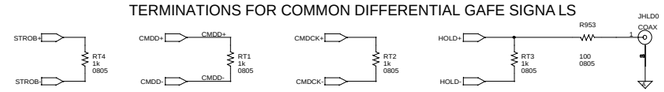

PULLUP/PULLDN RESIS TORS FOR GAFE ADDRESSING

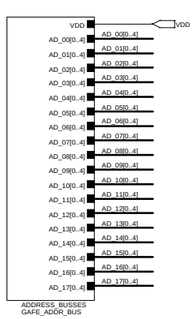

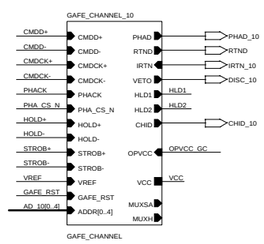

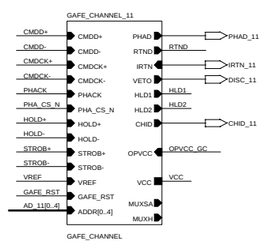

CHANNEL GROUP
10 & 11

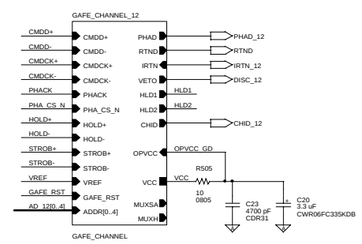

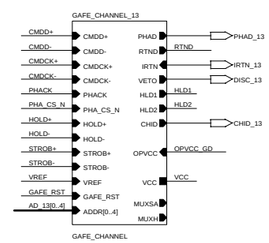

CHANNEL GROUP
12 & 13

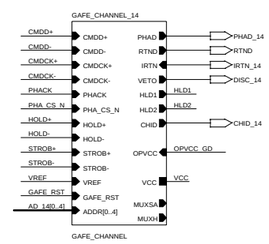

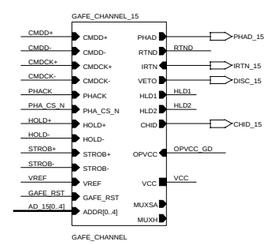

CHANNEL GROUP
14 & 15

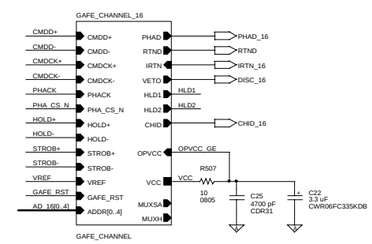

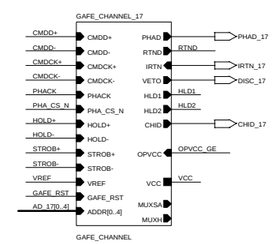

CHANNEL GROUP
16 & 17

HLD-RELATED TERMI NATIONS

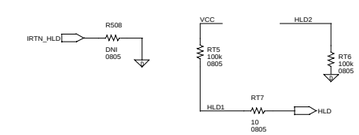

TEST POINTS, POWER AND GROUND

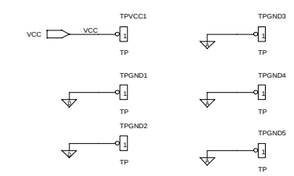

Title: GARC 2 GAFE SCHEMATIC		Dave Sheppard, x66539
Size: D	Document Number: <Doc>	Rev: -
Date: Friday, November 15, 2002	Sheet 20 of 29	

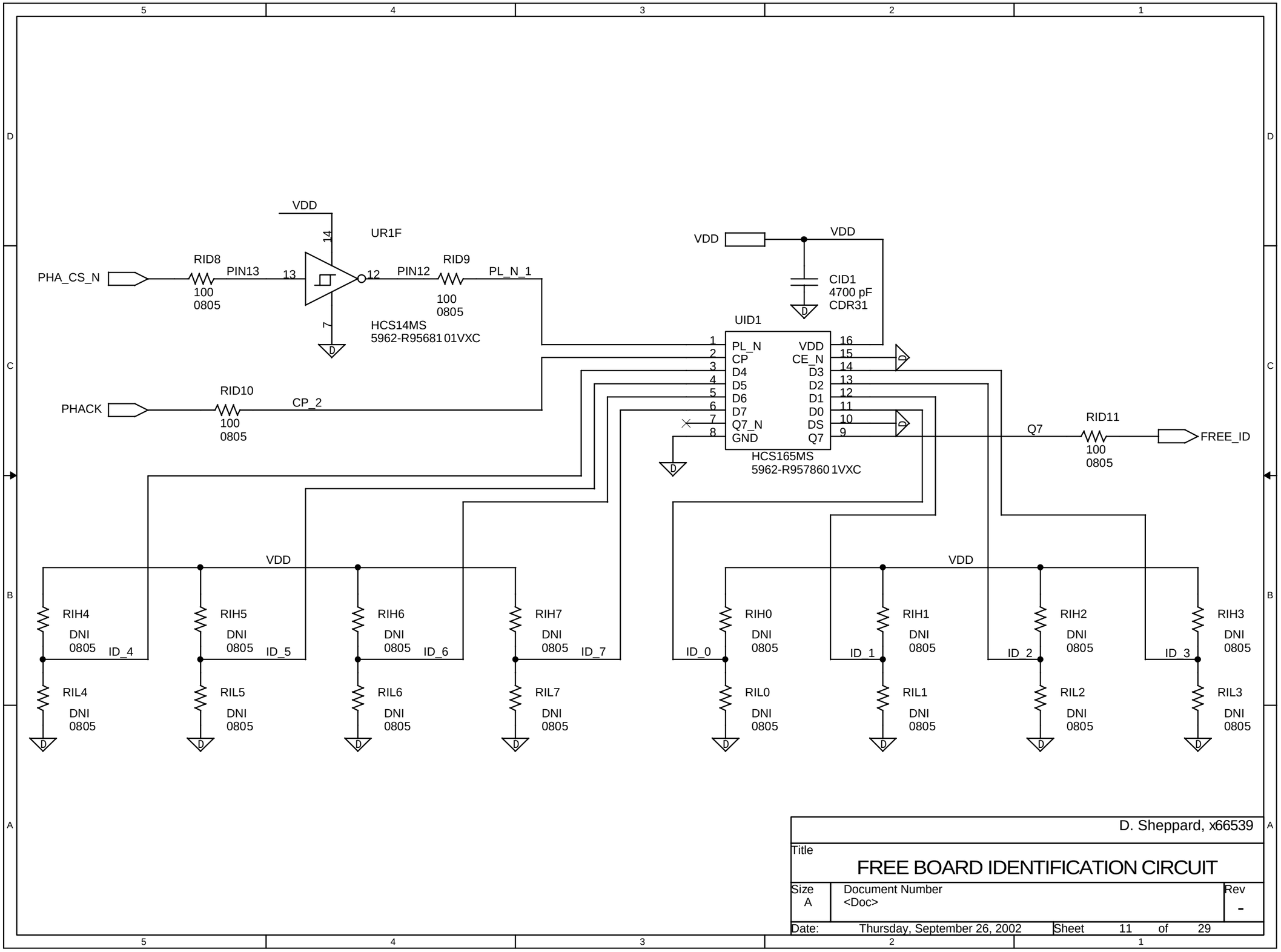

D. Sheppard, x66539

Title

FREE BOARD IDENTIFICATION CIRCUIT

Size	Document Number	Rev
A	<Doc>	-

Date: Thursday, September 26, 2002 Sheet 11 of 29

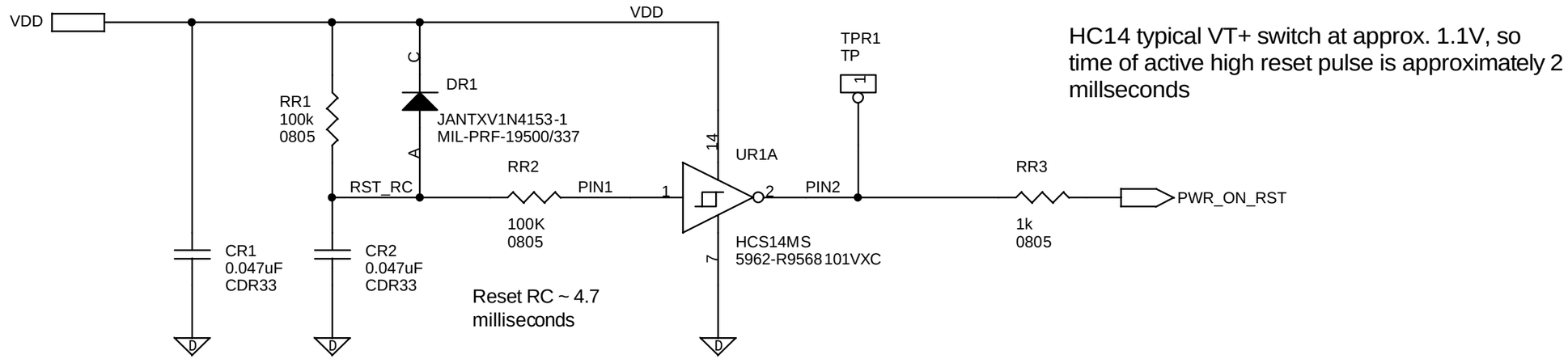

HC14 typical VT+ switch at approx. 1.1V, so time of active high reset pulse is approximately 2 millseconds

SPARE INVERTERS

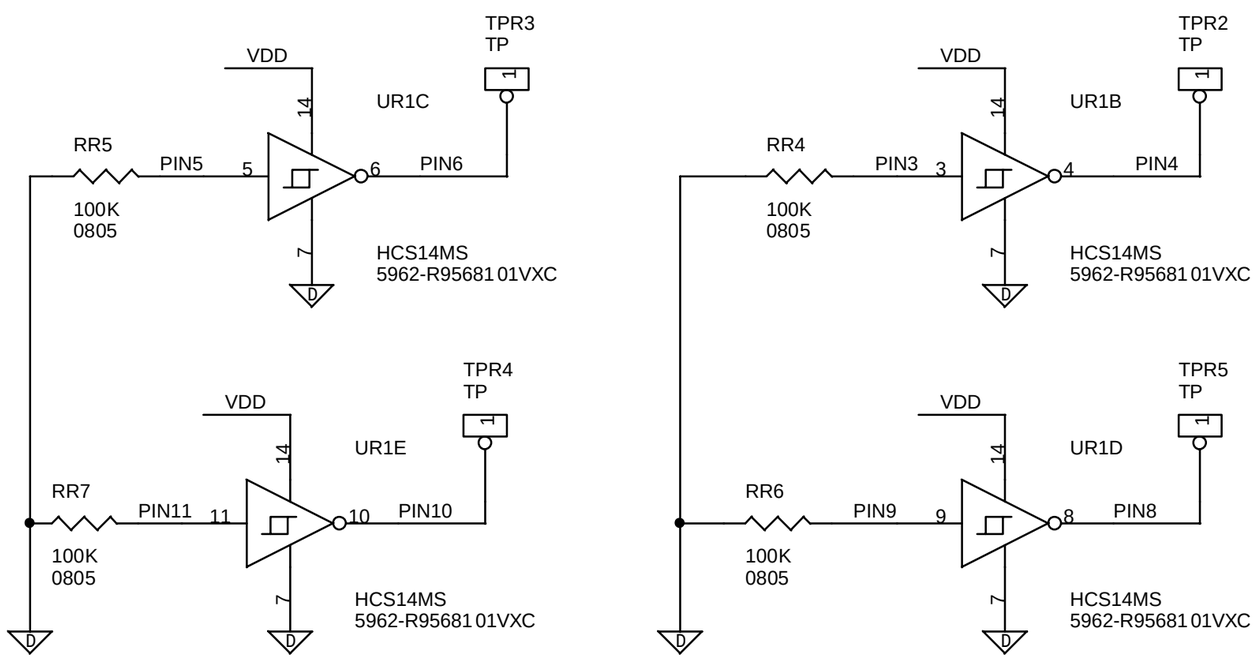

Dave Sheppard, x66539		
Title: ACD FREE Reset Circuit		
Size: A	Document Number: <Doc>	Rev: [-]
Date: Thursday, September 26, 2002	Sheet 8 of 29	

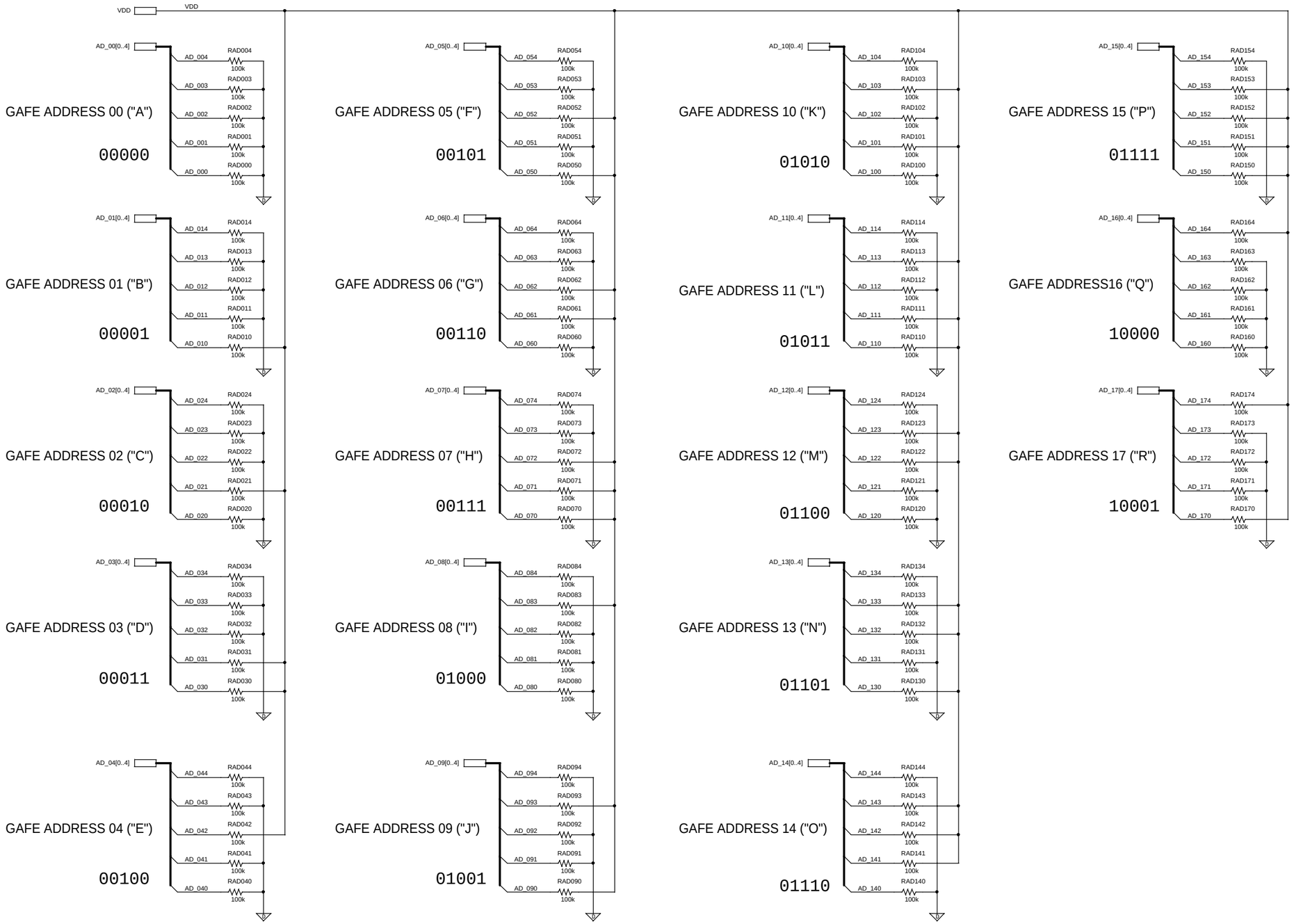

Dave Sheppard, X66539

Title	GLAST ACD	
Size C	Document Number ACD-xxx	Rev -
Date: Thursday, September 26, 2002	Sheet 27 of 29	

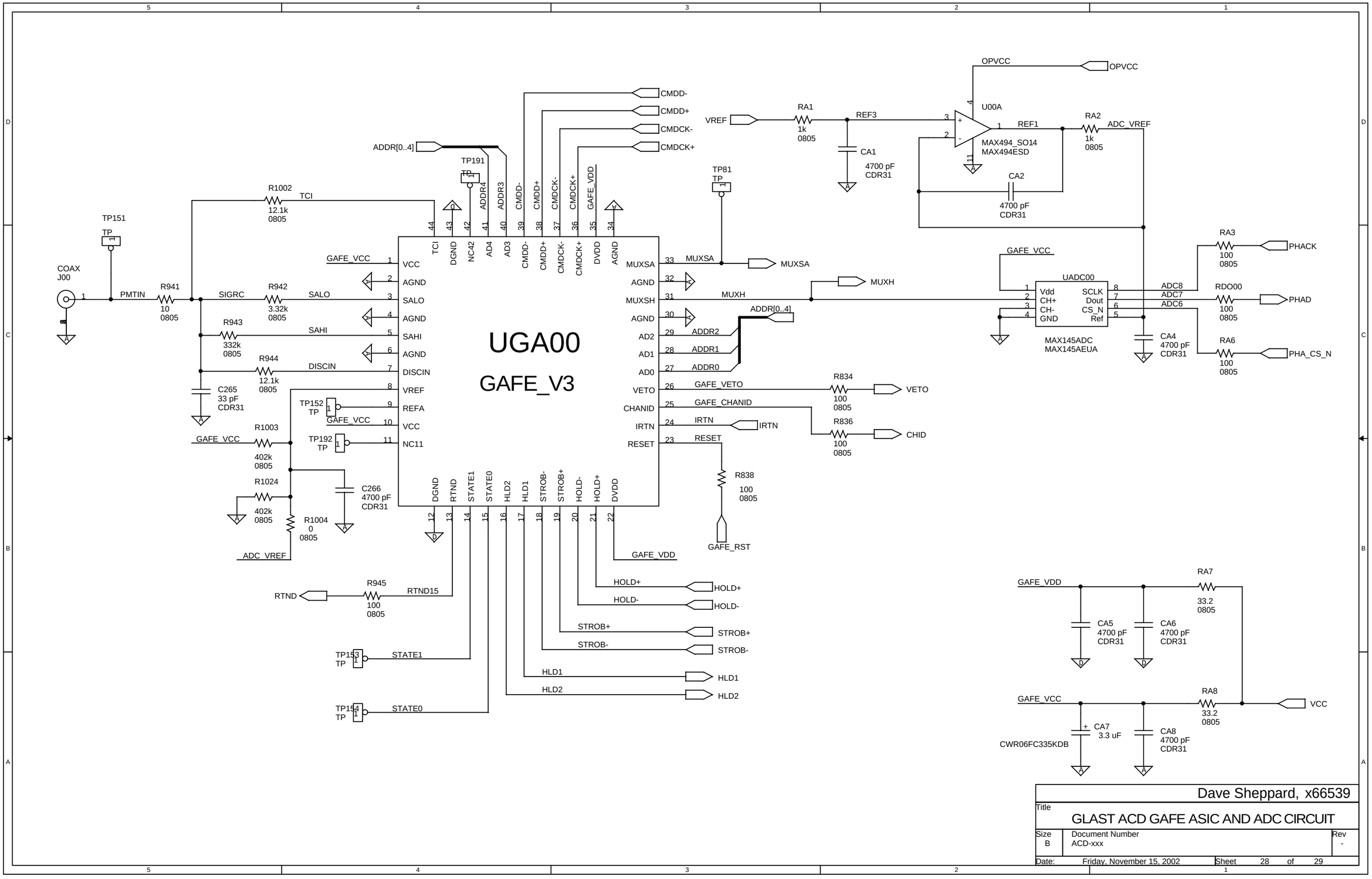

Dave Sheppard, x66539

Title: GLAST ACD GAFE ASIC AND ADC CIRCUIT

Size	Document Number	Rev
B	ACD-xxx	-

Date: Friday, November 15, 2002 Sheet 28 of 29

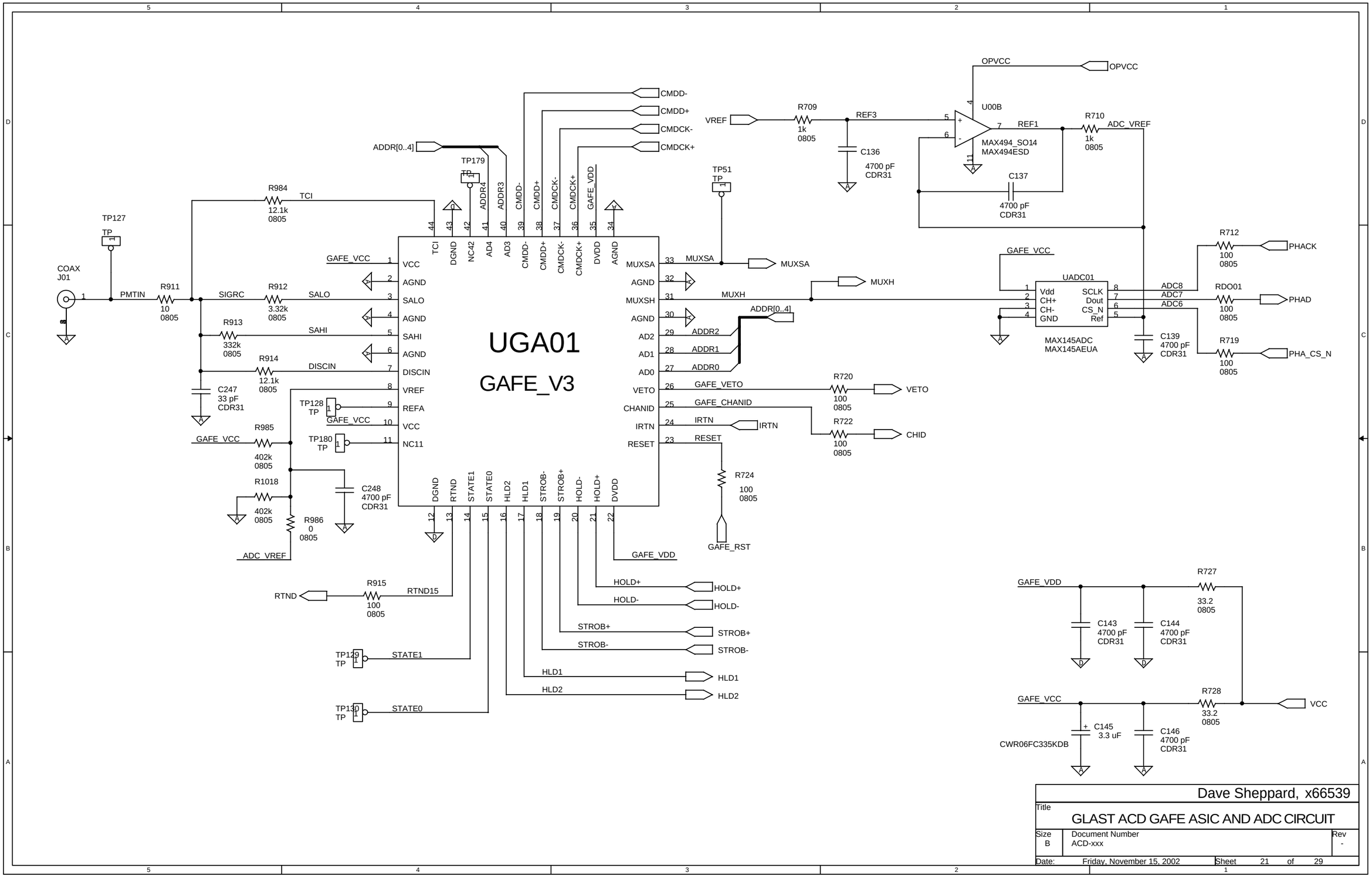

Dave Sheppard, x66539

Title
GLAST ACD GAFE ASIC AND ADC CIRCUIT

Size	Document Number	Rev
B	ACD-xxx	-

Date: Friday, November 15, 2002 Sheet 21 of 29

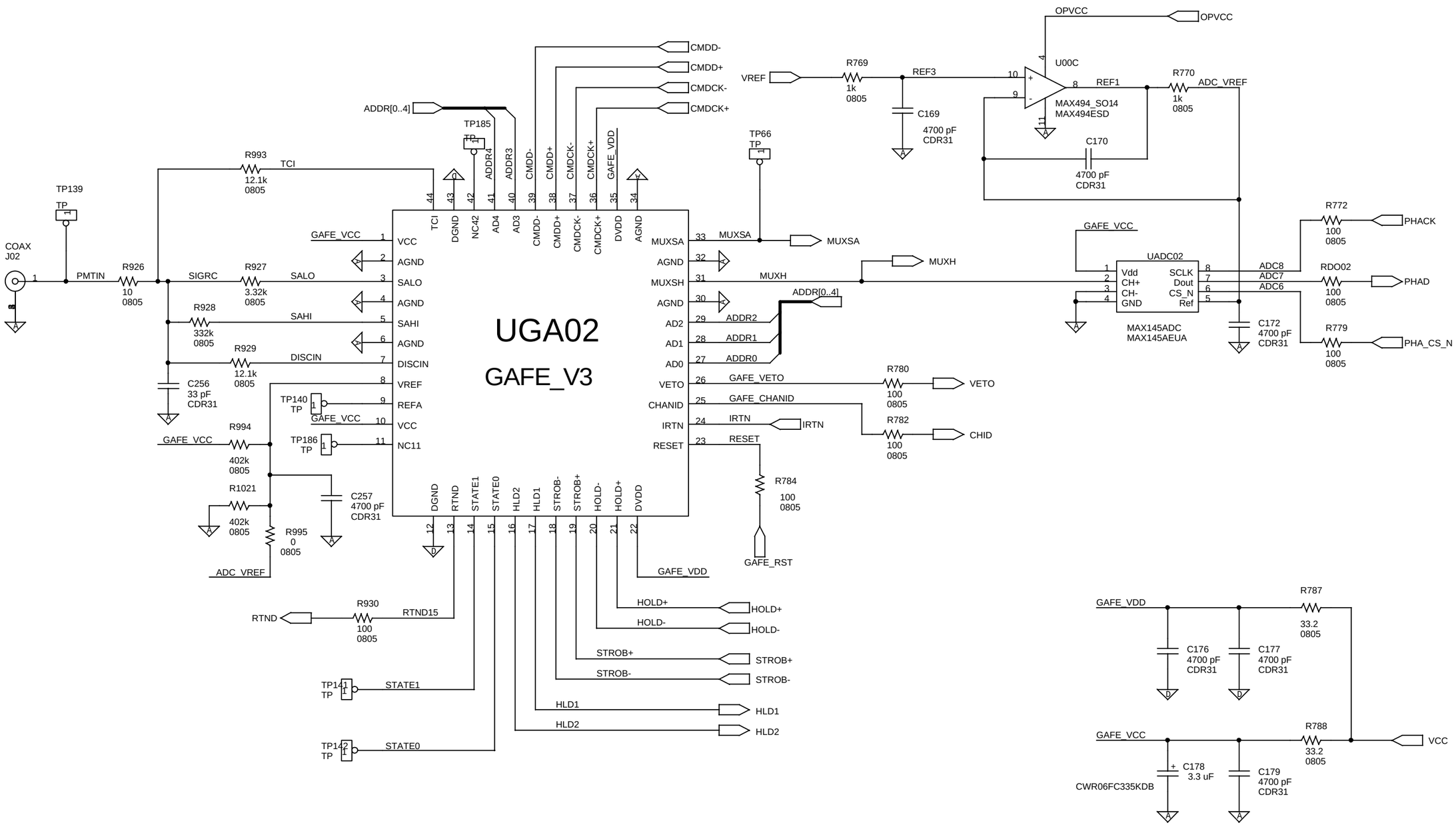

Dave Sheppard, x66539

Title
GLAST ACD GAFE ASIC AND ADC CIRCUIT

Size	Document Number	Rev
B	ACD-xxx	-

Date: Friday, November 15, 2002 Sheet 24 of 29

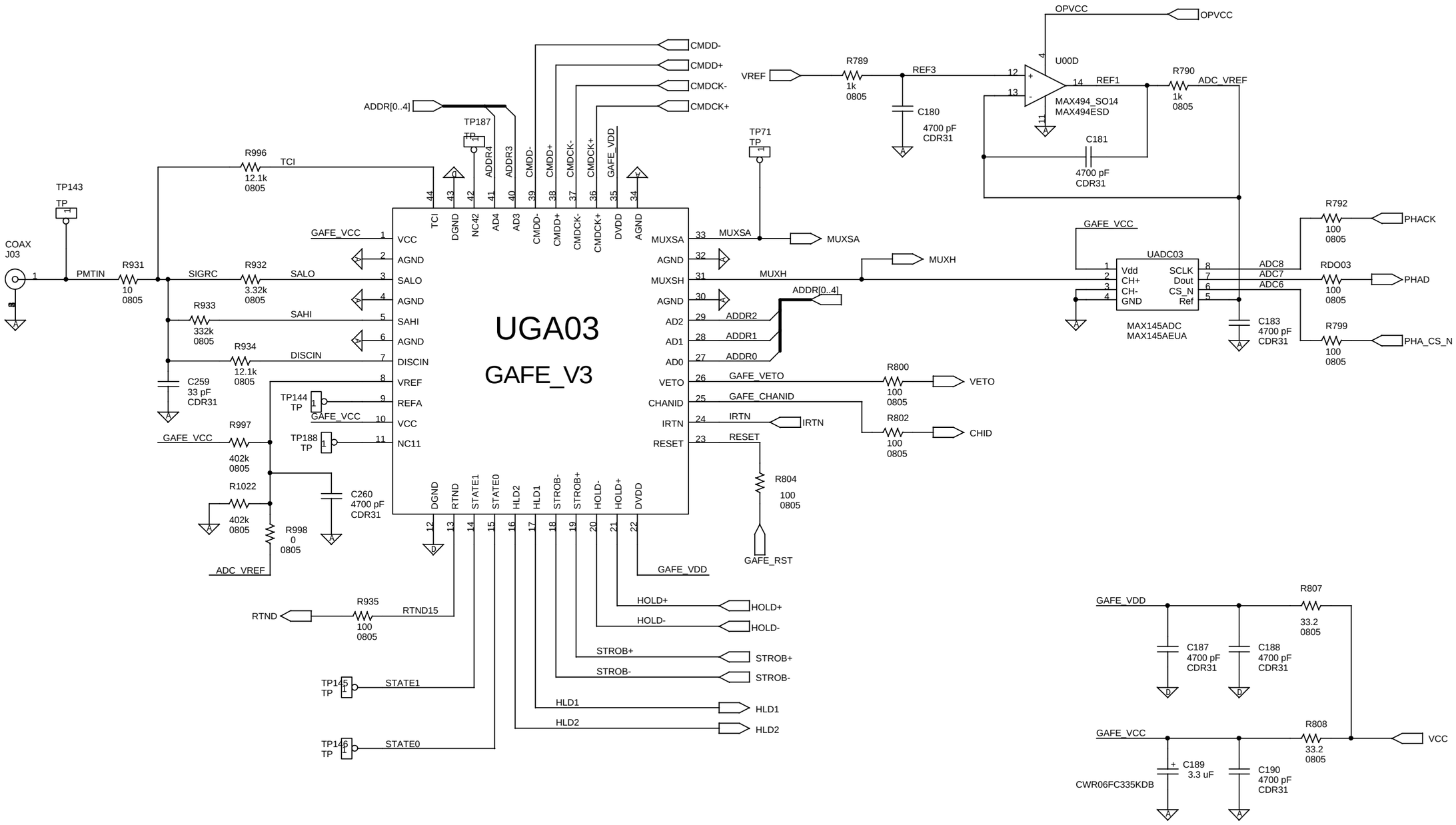

Dave Sheppard, x66539

Title
GLAST ACD GAFE ASIC AND ADC CIRCUIT

Size	Document Number	Rev
B	ACD-xxx	-

Date: Friday, November 15, 2002 Sheet 25 of 29

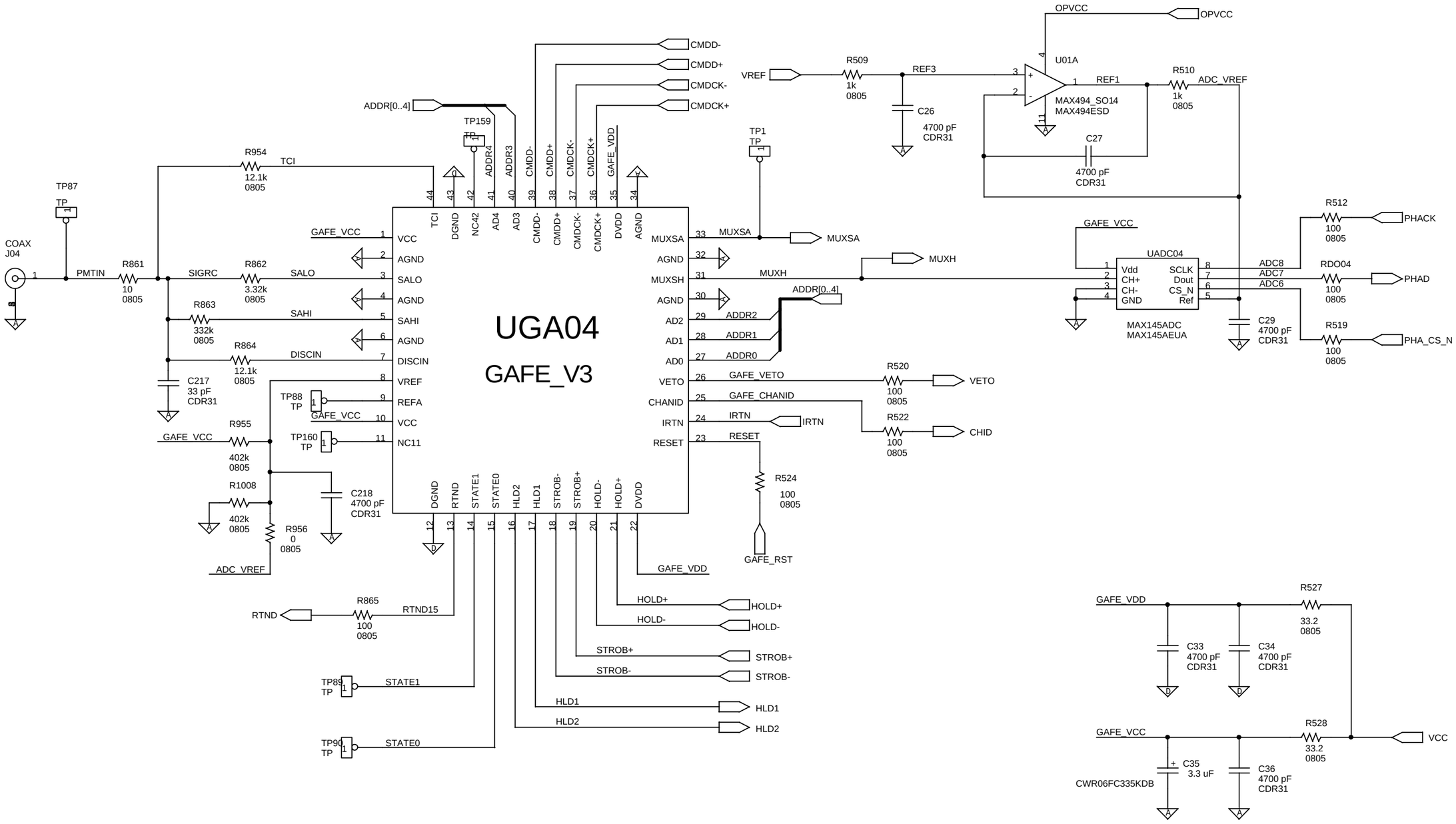

Dave Sheppard, x66539

Title
GLAST ACD GAFE ASIC AND ADC CIRCUIT

Size	Document Number	Rev
B	ACD-xxx	-

Date: Friday, November 15, 2002 Sheet 2 of 29

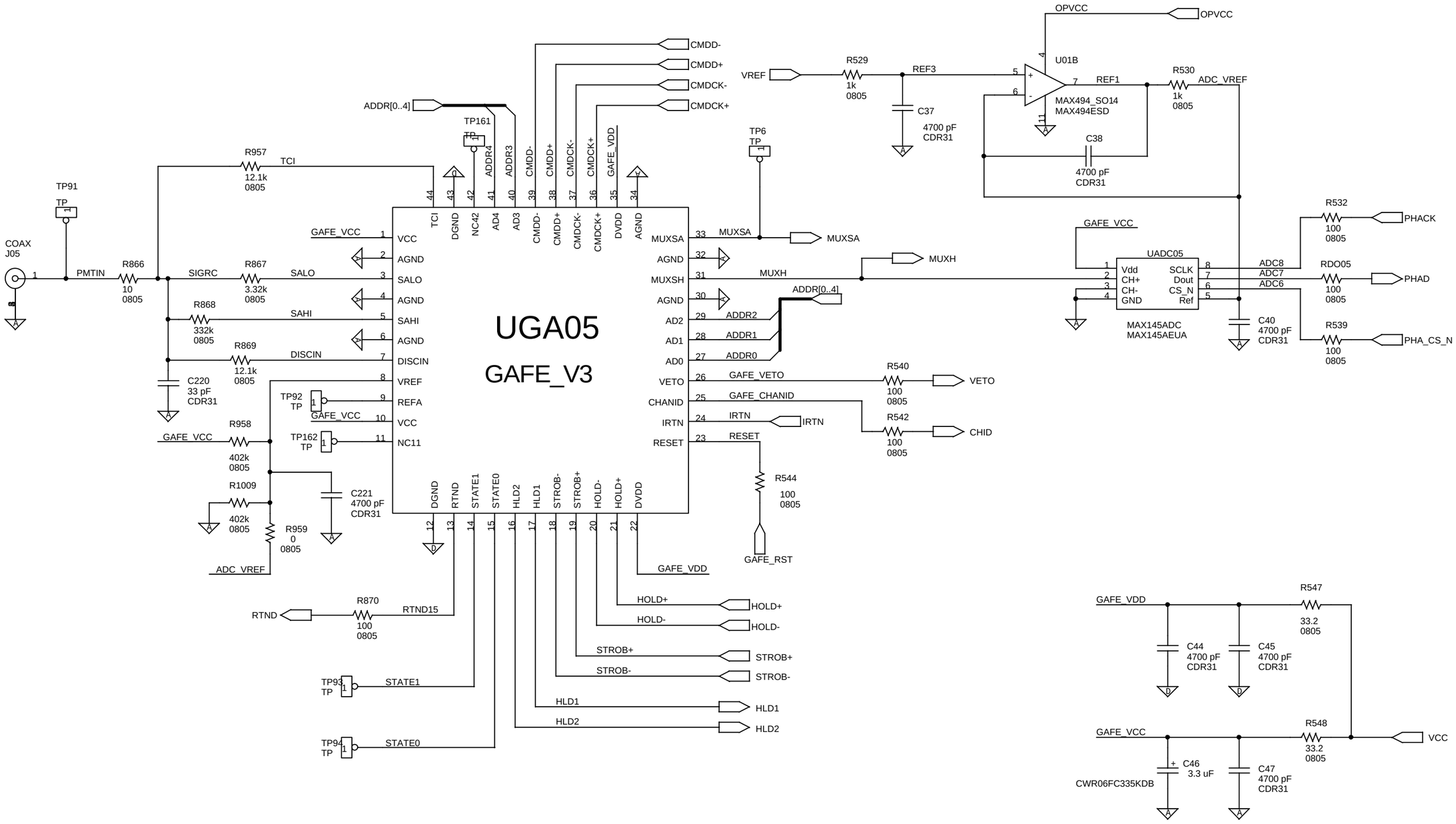

Dave Sheppard, x66539

Title
GLAST ACD GAFE ASIC AND ADC CIRCUIT

Size	Document Number	Rev
B	ACD-xxx	-

Date: Friday, November 15, 2002 Sheet 4 of 29

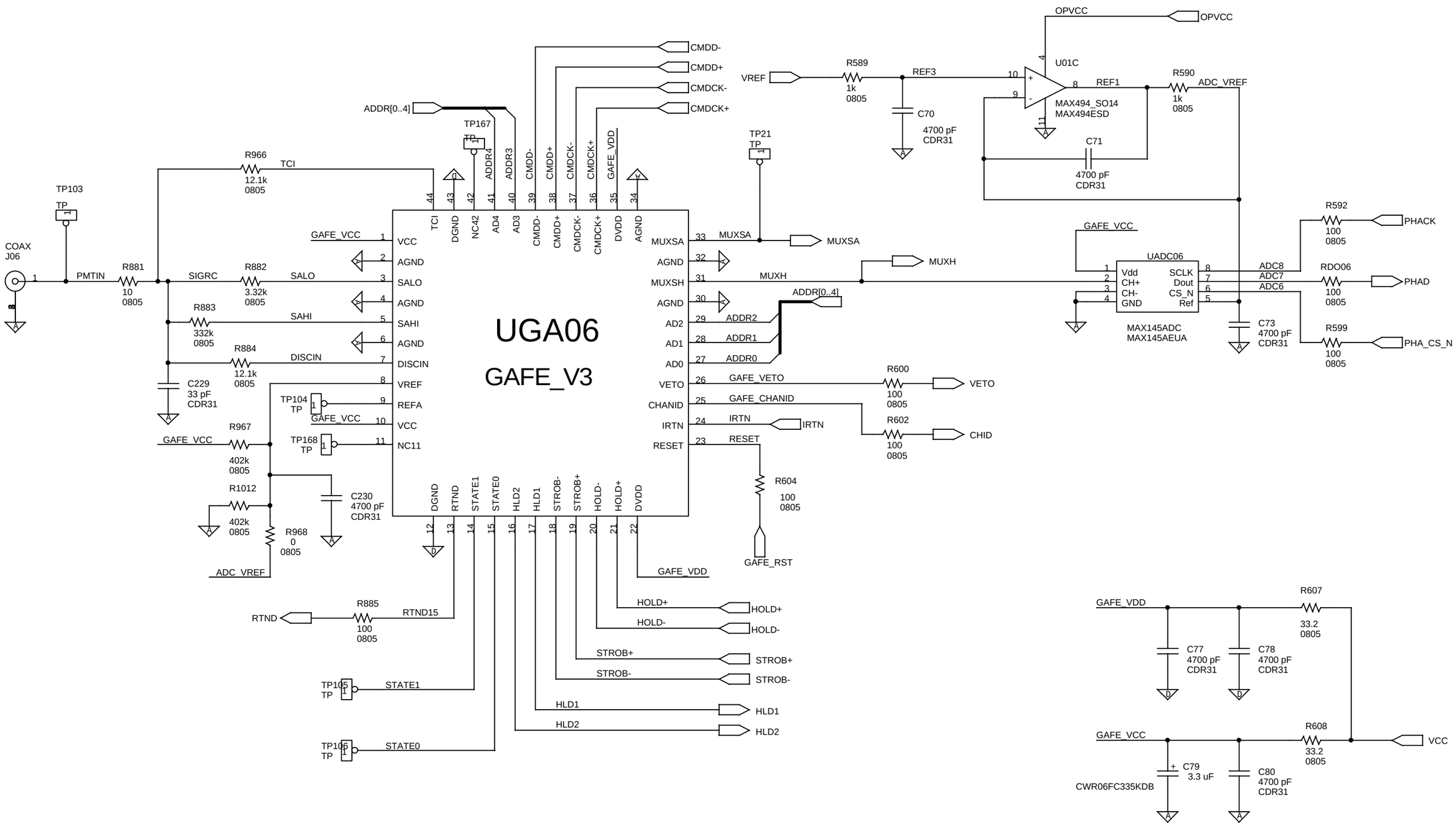

Dave Sheppard, x66539

Title
GLAST ACD GAFE ASIC AND ADC CIRCUIT

Size	Document Number	Rev
B	ACD-xxx	-

Date: Friday, November 15, 2002 Sheet 14 of 29

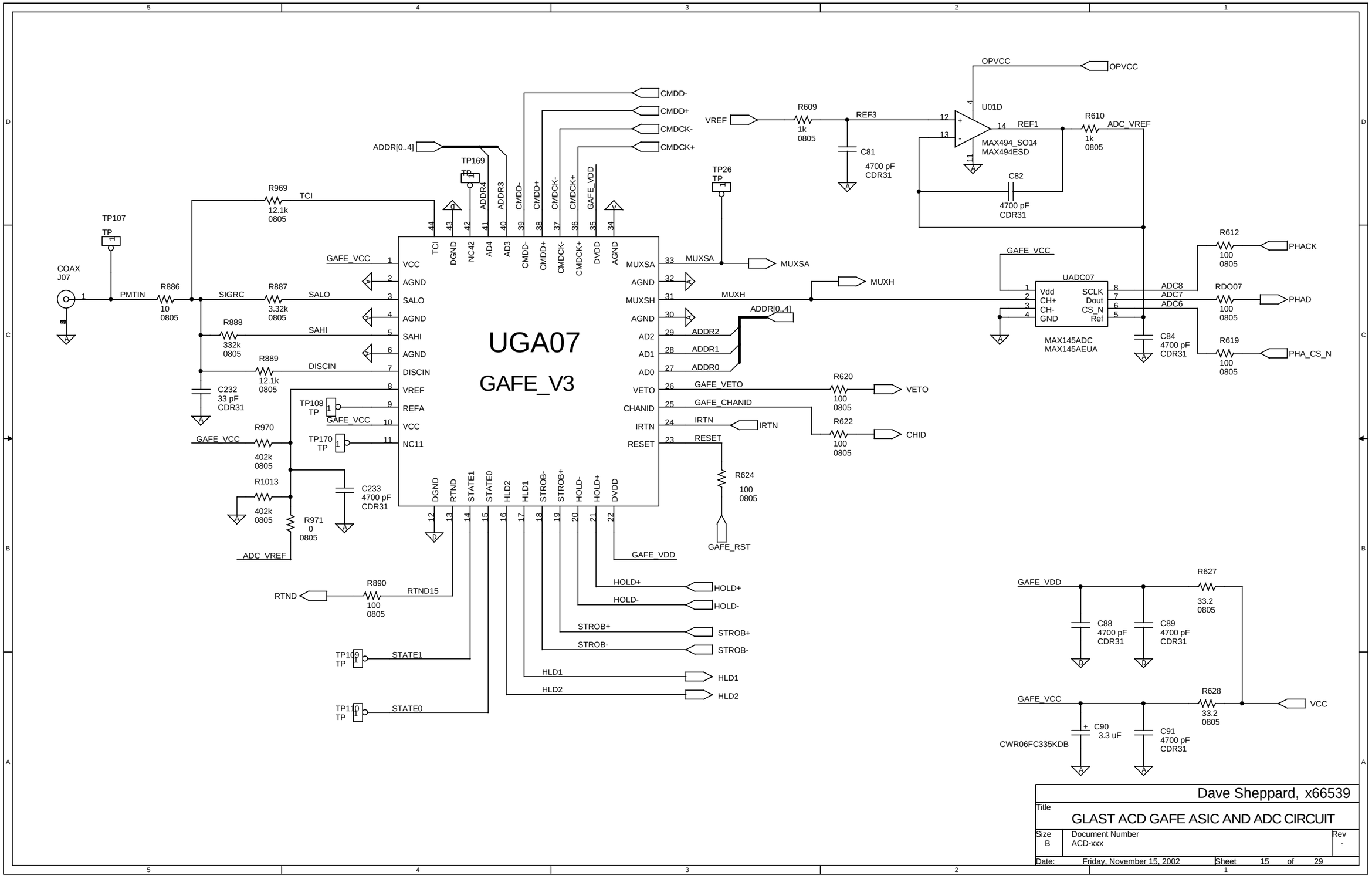

Dave Sheppard, x66539

Title: GLAST ACD GAFE ASIC AND ADC CIRCUIT

Size: B | Document Number: ACD-xxx | Rev: -

Date: Friday, November 15, 2002 | Sheet 15 of 29

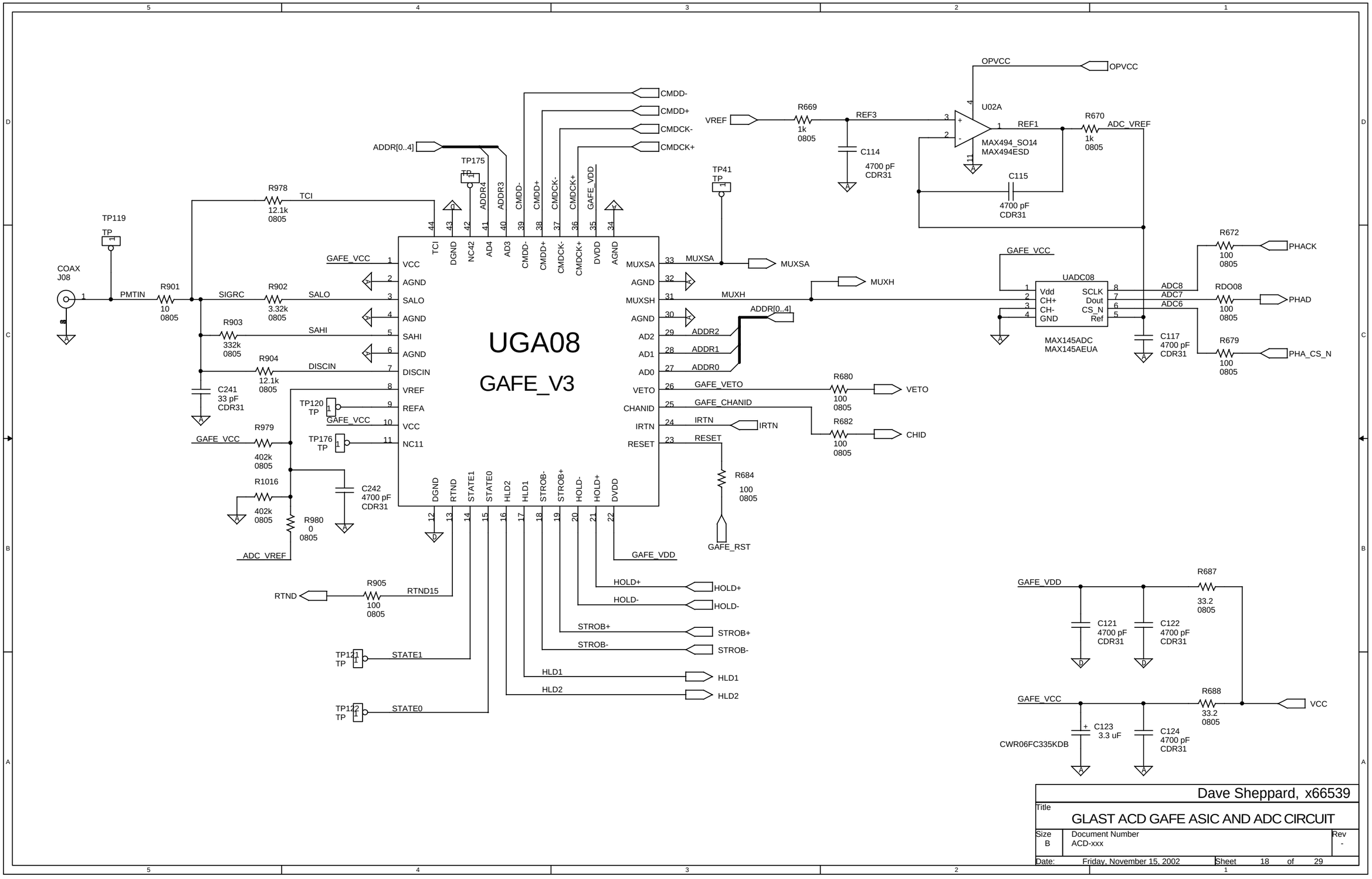

Dave Sheppard, x66539

Title
GLAST ACD GAFE ASIC AND ADC CIRCUIT

Size	Document Number	Rev
B	ACD-xxx	-

Date: Friday, November 15, 2002 Sheet 18 of 29

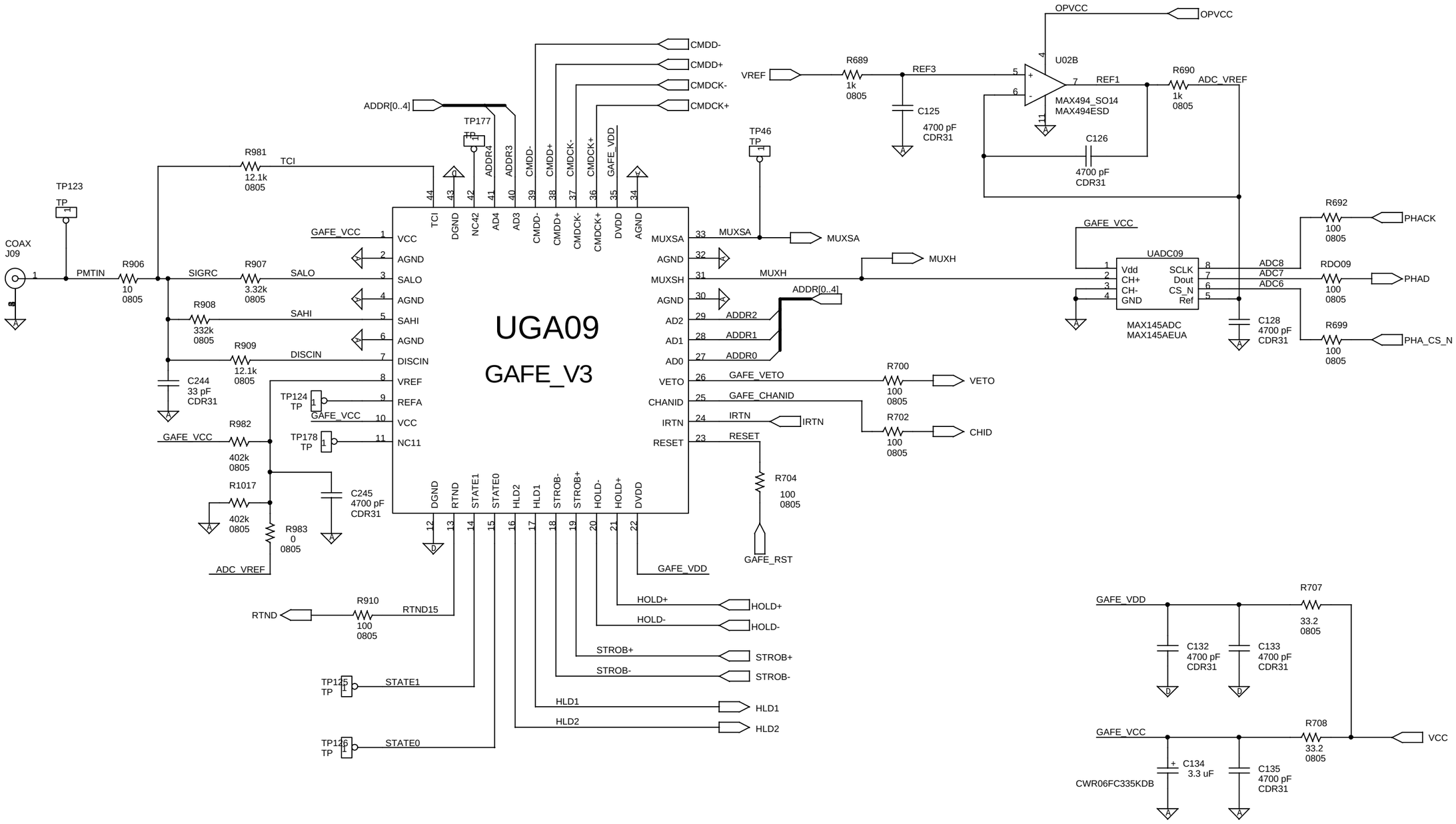

Dave Sheppard, x66539

Title
GLAST ACD GAFE ASIC AND ADC CIRCUIT

Size	Document Number	Rev
B	ACD-xxx	-

Date: Friday, November 15, 2002 Sheet 19 of 29

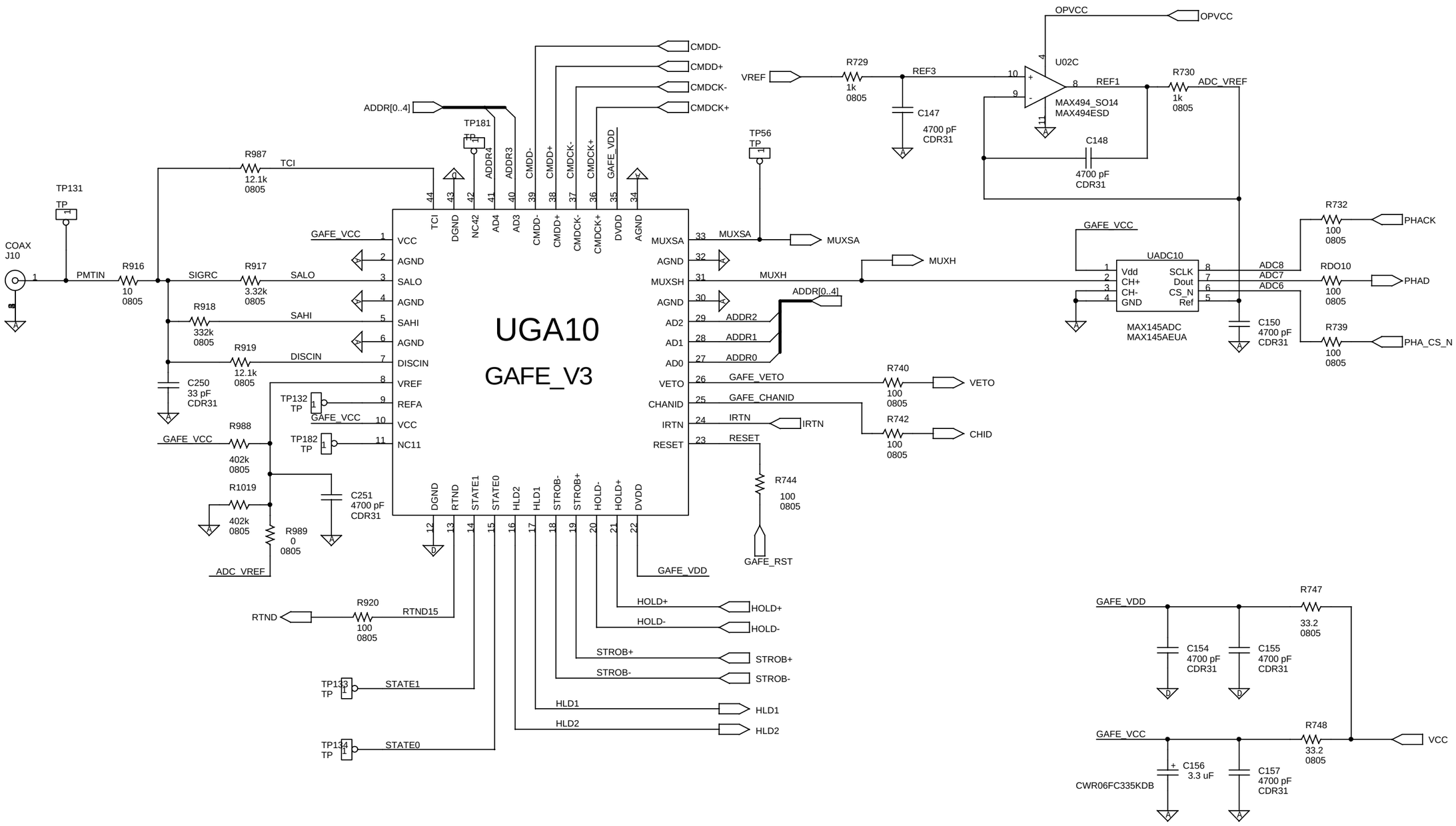

Dave Sheppard, x66539

Title
GLAST ACD GAFE ASIC AND ADC CIRCUIT

Size	Document Number	Rev
B	ACD-xxx	-

Date: Friday, November 15, 2002 Sheet 22 of 29

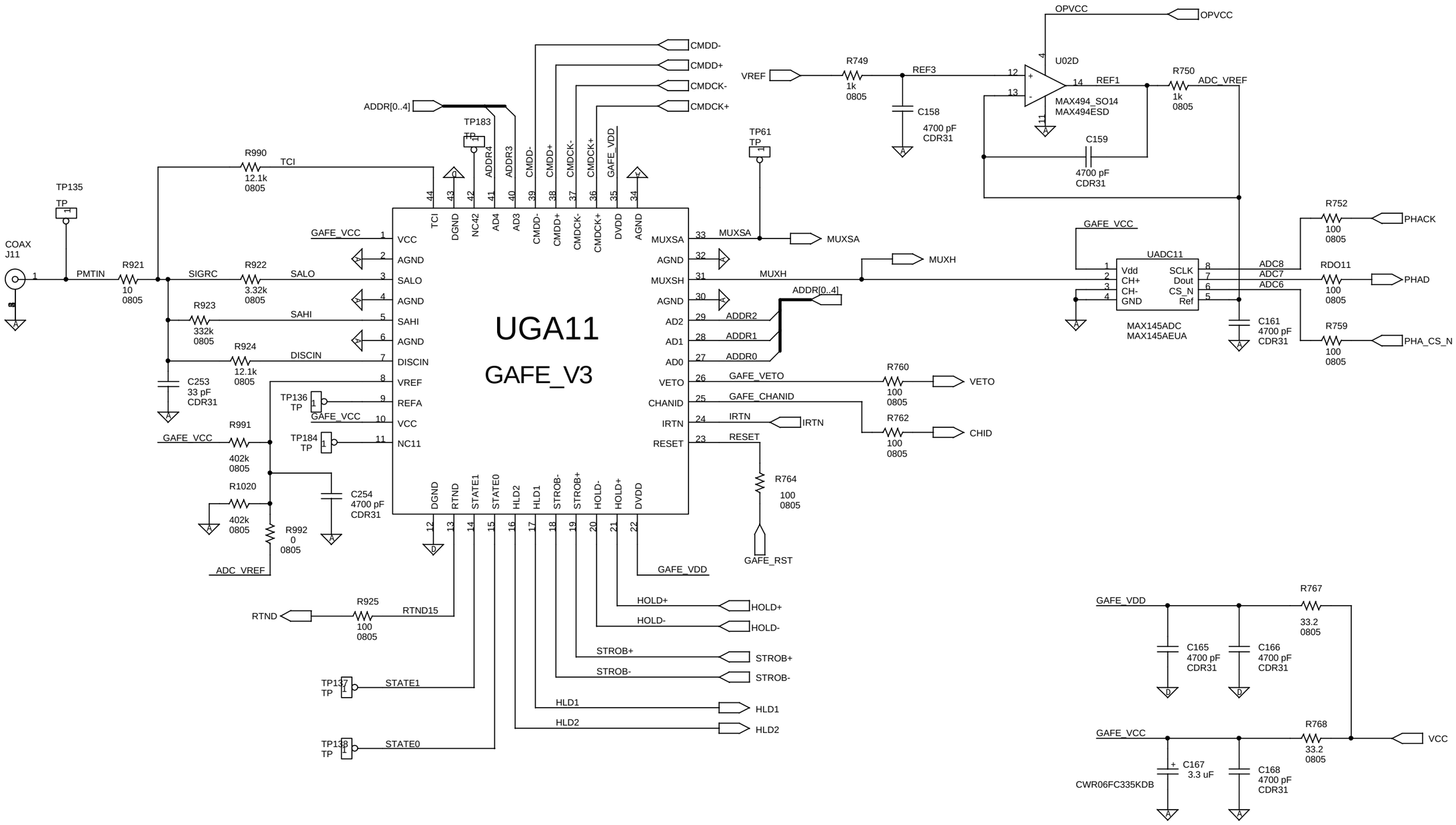

Dave Sheppard, x66539

Title
GLAST ACD GAFE ASIC AND ADC CIRCUIT

Size	Document Number	Rev
B	ACD-xxx	-

Date: Friday, November 15, 2002 Sheet 23 of 29

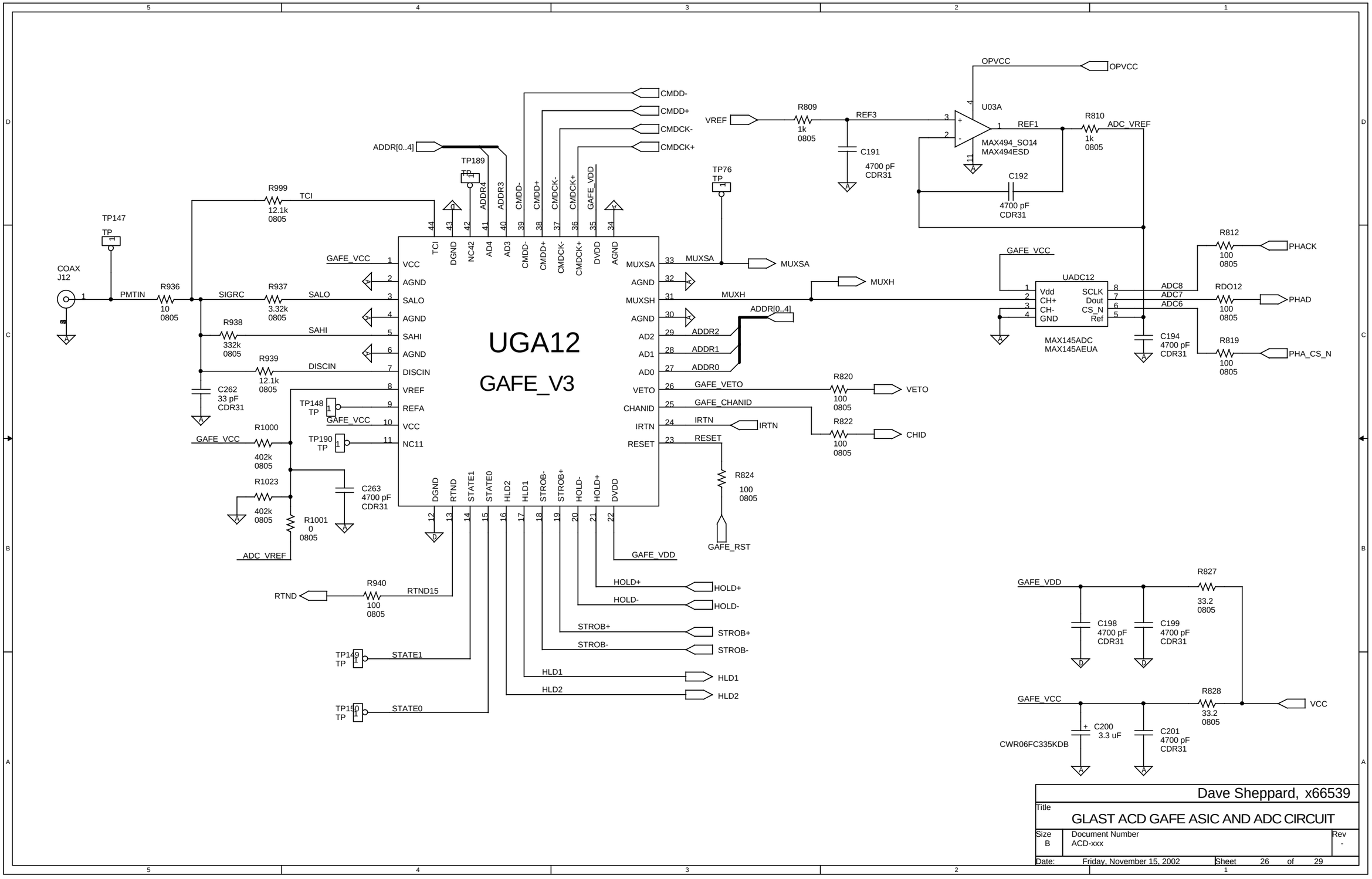

Dave Sheppard, x66539

Title
GLAST ACD GAFE ASIC AND ADC CIRCUIT

Size	Document Number	Rev
B	ACD-xxx	-

Date: Friday, November 15, 2002 Sheet 26 of 29

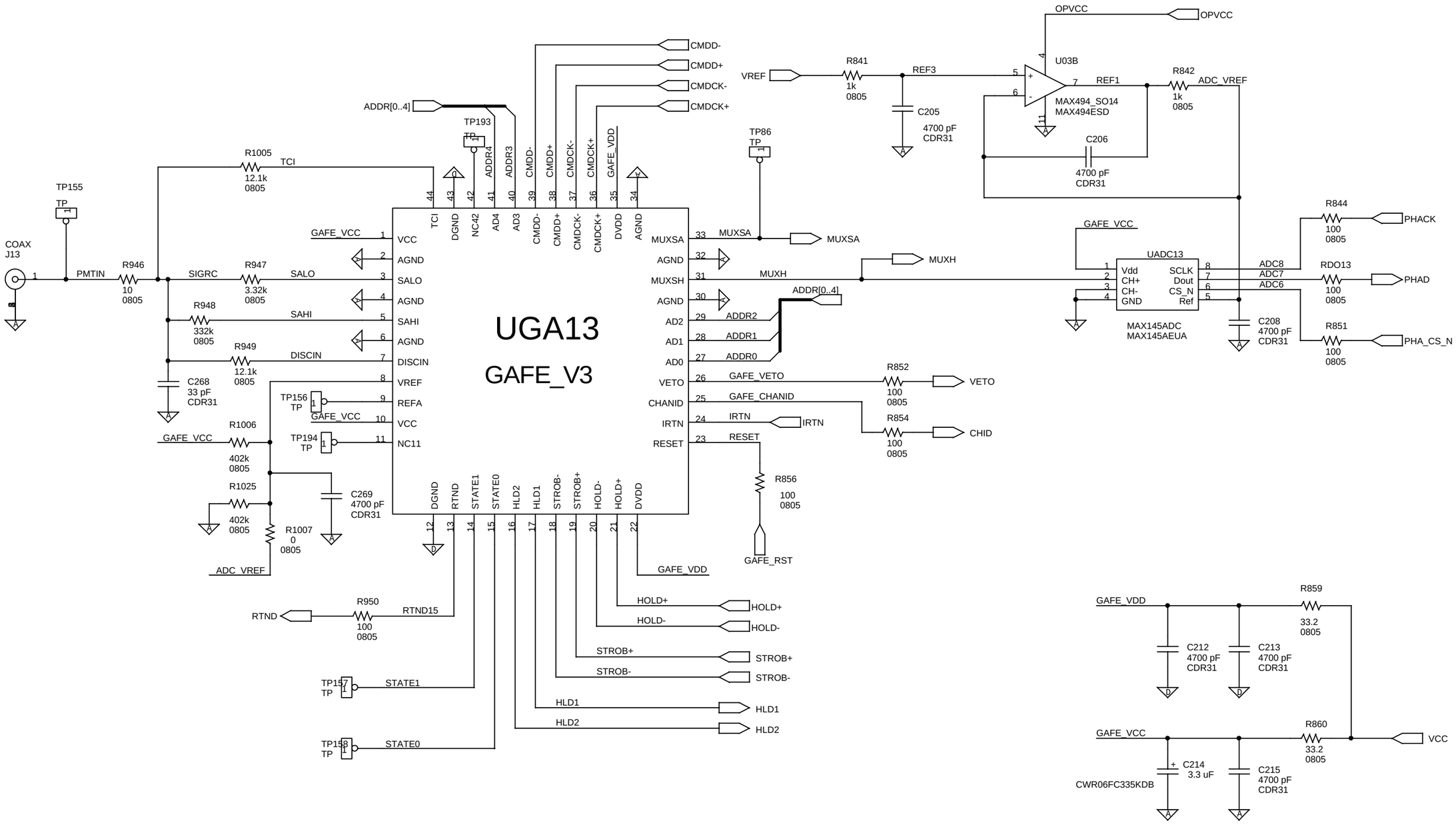

Dave Sheppard, x66539

Title
GLAST ACD GAFE ASIC AND ADC CIRCUIT

Size	Document Number	Rev
B	ACD-xxx	-

Date: Friday, November 15, 2002 Sheet 29 of 29

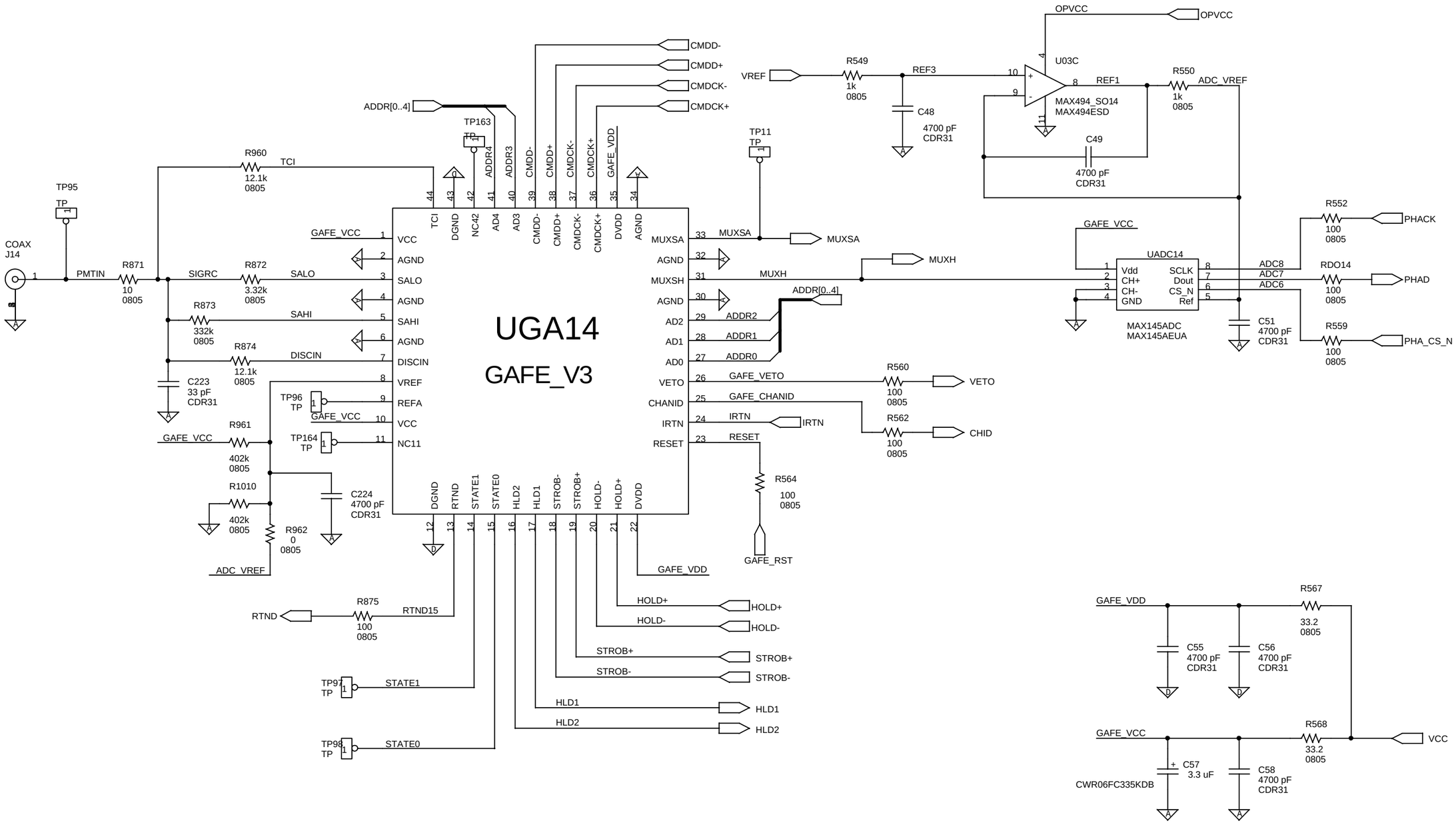

Dave Sheppard, x66539

Title: GLAST ACD GAFE ASIC AND ADC CIRCUIT

Size	Document Number	Rev
B	ACD-xxx	-

Date: Friday, November 15, 2002 Sheet 7 of 29

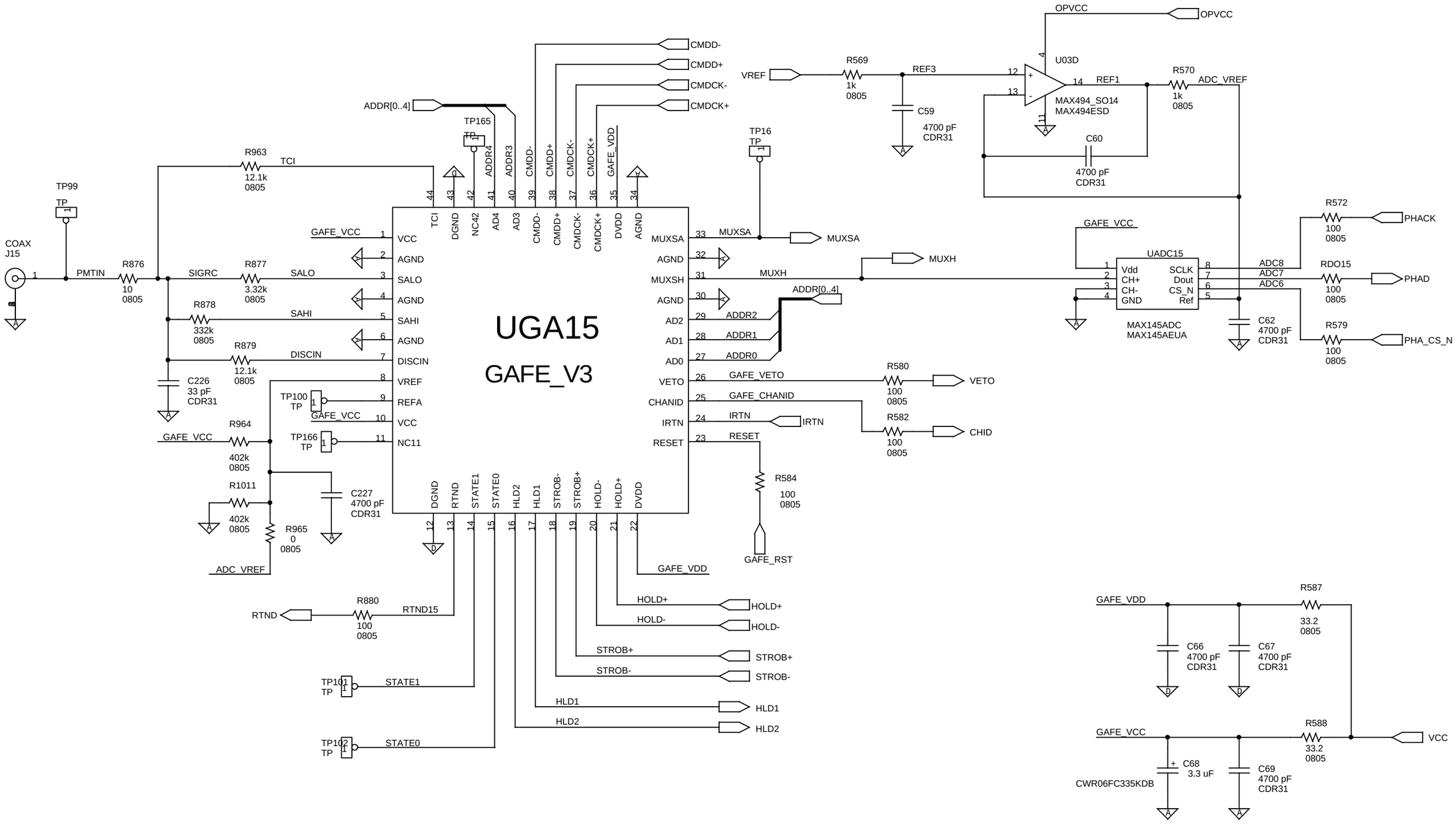

Dave Sheppard, x66539

Title
GLAST ACD GAFE ASIC AND ADC CIRCUIT

Size	Document Number	Rev
B	ACD-xxx	-

Date: Friday, November 15, 2002 Sheet 10 of 29

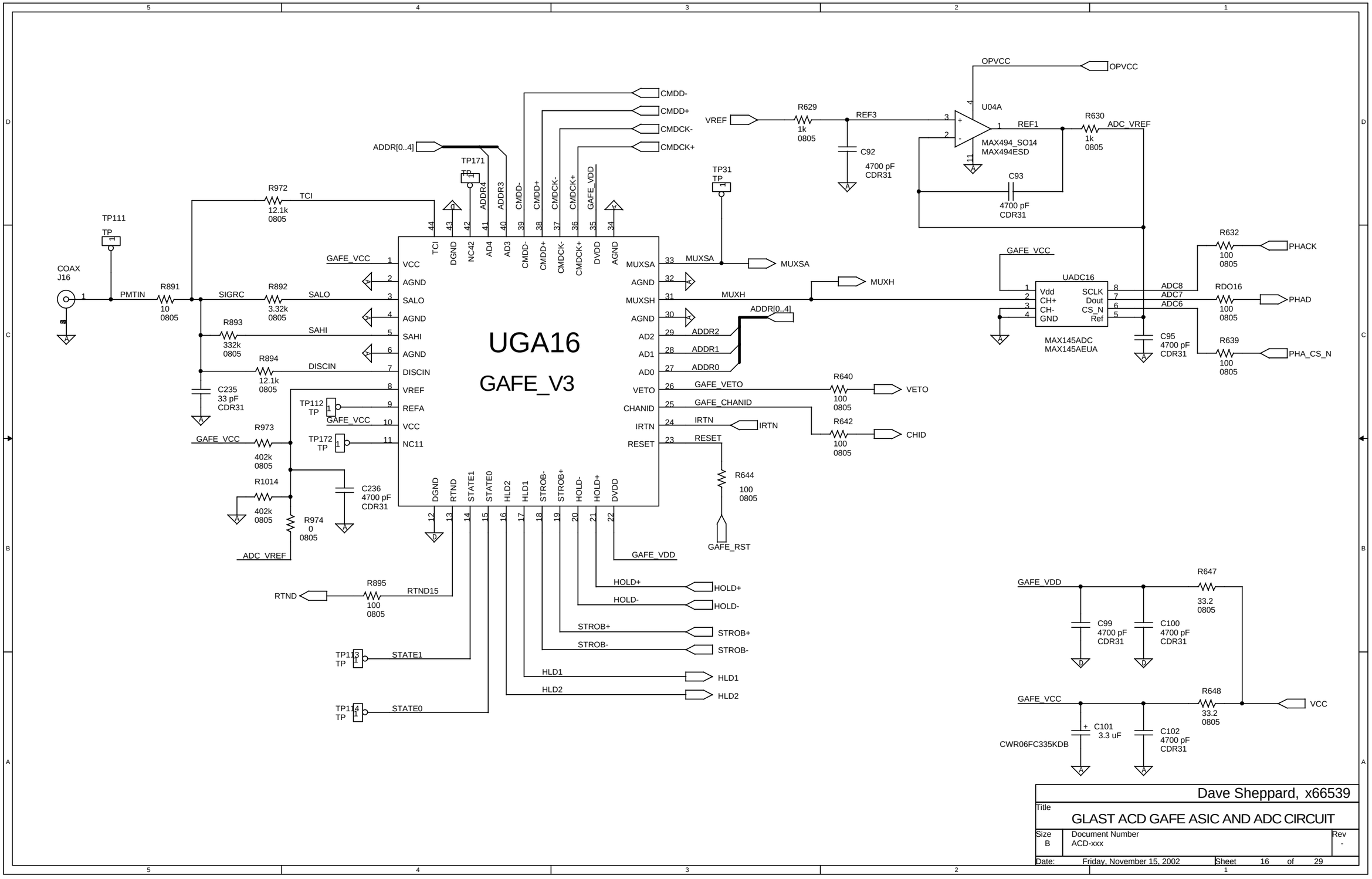

Dave Sheppard, x66539

Title: GLAST ACD GAFE ASIC AND ADC CIRCUIT

Size	Document Number	Rev
B	ACD-xxx	-

Date: Friday, November 15, 2002 Sheet 16 of 29

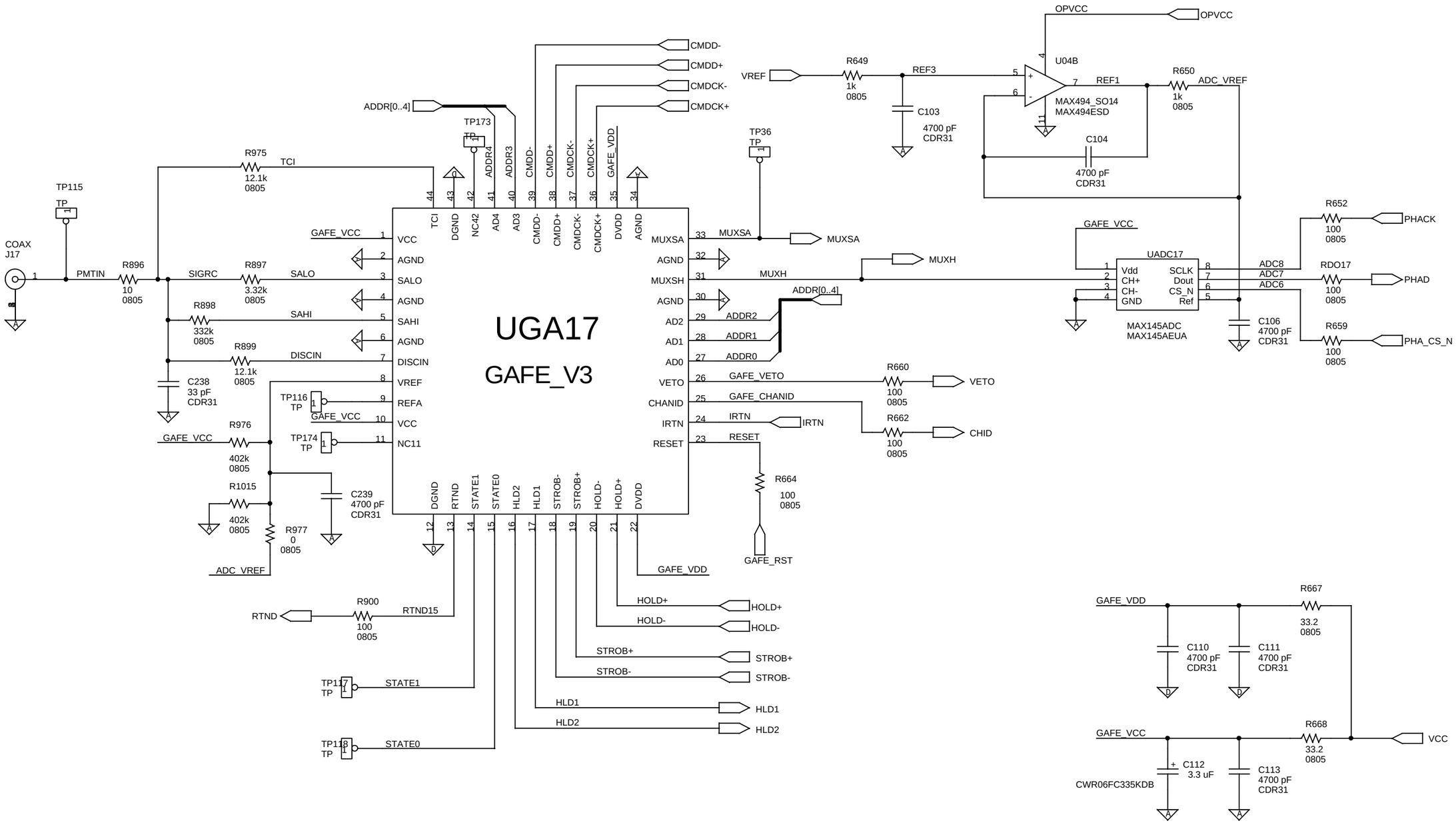

Dave Sheppard, x66539

Title
GLAST ACD GAFE ASIC AND ADC CIRCUIT

Size	Document Number	Rev
B	ACD-xxx	-

Date: Friday, November 15, 2002 Sheet 17 of 29